TM-077
1st printing

LeMans™

ATARI™

Operation, Maintenance, Service Manual

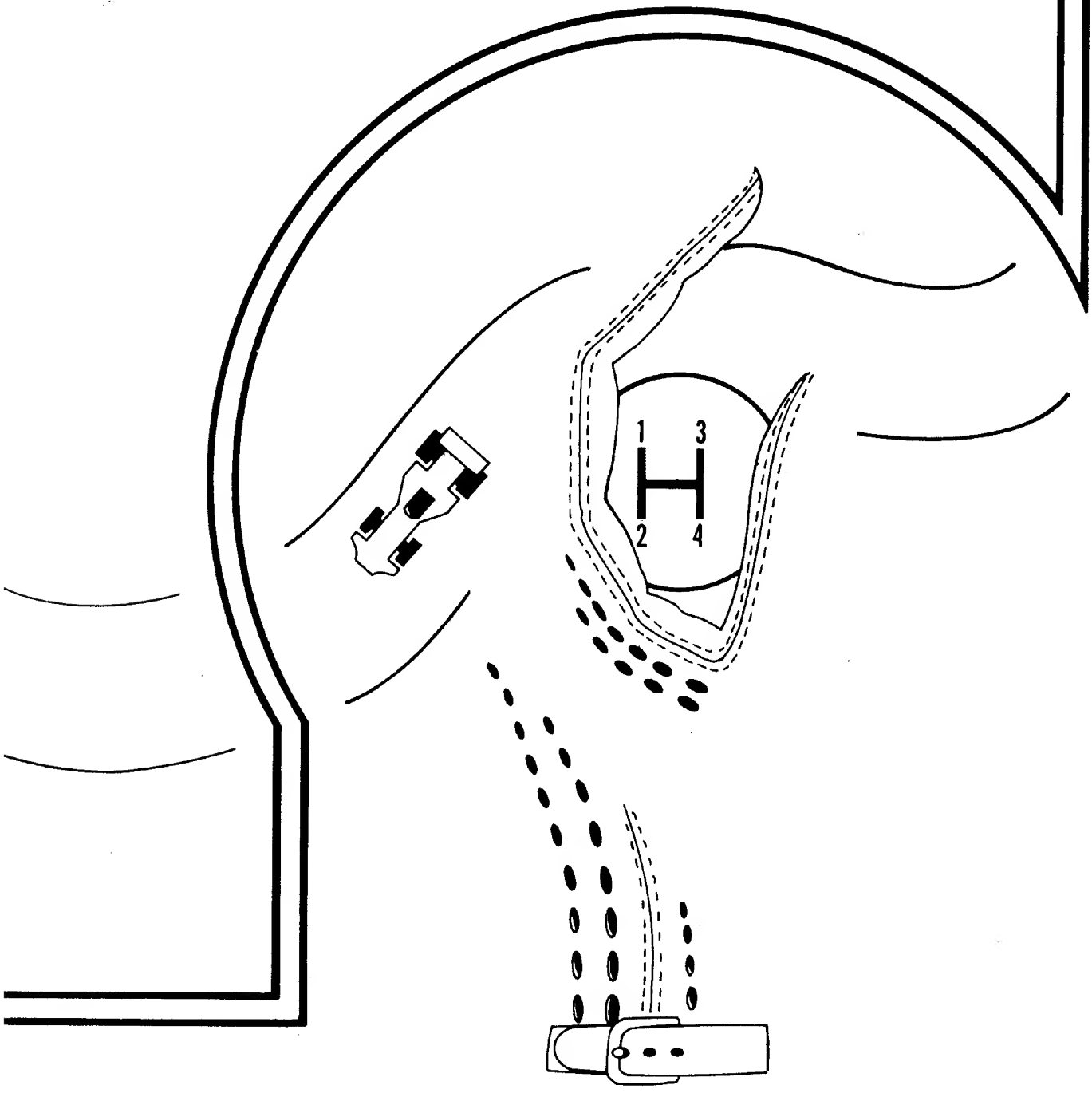

LeMans™

Operation, Maintenance and Service Manual

ATARI INC.
14600 WINCHESTER BLVD
LOS GATOS, CA 95030
408/374-2440 • TELEX 357-488

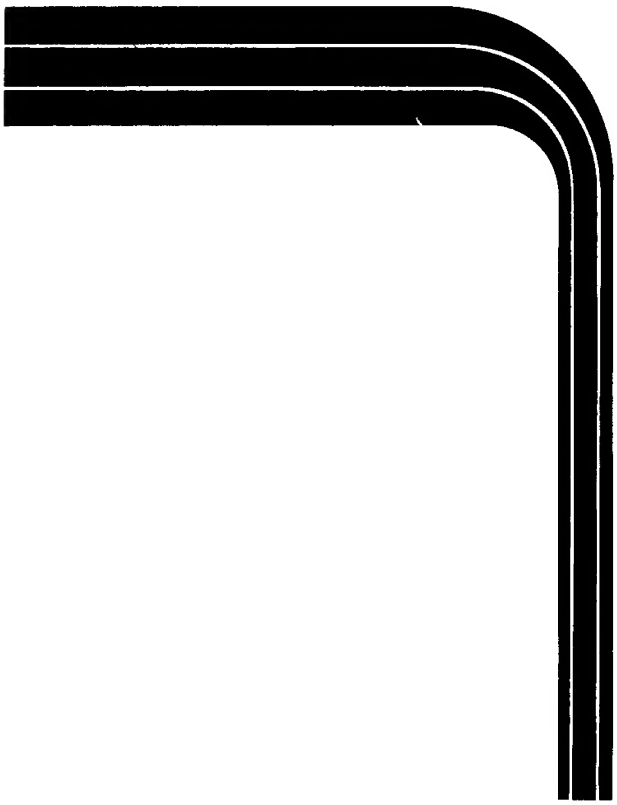

By the Publications Group, Engineering Department

ATARI™
Innovative
leisure

All rights reserved. Copyright © 1976 by Atari, Inc.
No part of this publication may be reproduced by any mechanical, photographic, or electronic process, or in the form of a phonographic recording, nor may it be stored in a retrieval system, transmitted, or otherwise copied for public or private use, without permission from the publisher.

For permission requests, write:

Atari, Inc.
Engineering Dept.
Publications Group
14600 Winchester Blvd.
Los Gatos, Calif. 95030

Lithographed in the U.S.A.

Table of Contents

I. GENERAL MAINTENANCE AND SERVICE 1

1.1 Introduction and Warranty Information 1

1.2 Access and Basic Construction 1

1.3 New Machine Set-Up and Checkout Procedures 1

1.4 Game Sequence 2

1.5 Antenna Wire and Anti-Static Modification 2

1.6 TV and Lighting: Service Procedures 3
- *1.6.1 General Illumination Lamps*
- *1.6.2 Plexiglas Screen*
- *1.6.3 Bezel*
- *1.6.4 TV Monitor Removal*
- *1.6.5 TV Monitor Adjustment*

1.7 Coin Door: Service Procedures 4
- *1.7.1 Door Lock*
- *1.7.2 Reject Linkage*
- *1.7.3 Coin Micro Switches*
- *1.7.4 Coin Acceptors*
- *1.7.5 Acceptor Adjustment*
- *1.7.6 Acceptor Maintenance*

1.8 Electronics Tray Subassemblies: Service Procedures 5
- *1.8.1 Fuse Replacement*
- *1.8.2 Transformer Replacement*
- *1.8.3 Interlock Switches*
- *1.8.4 Printed Circuit Board*
- *1.8.5 PCB Adjustments*

1.9 Mechanical Controls: Service Procedures 6
- *1.9.1 Control Panel*
- *1.9.2 Gear Shifter Assembly*
- *1.9.3 Pedal Assembly*
- *1.9.4 Steering Wheel Assembly*

1.10 Regular Machine Maintenance 6

1.11 Troubleshooting Procedures 6
- *1.11.1 TV Monitor*
- *1.11.2 Printed Circuit Board*
- *1.11.3 Wiring Harness*
- *1.11.4 General Suggestions*

Table of Contents

1.11.5 *TV Monitor Troubleshooting*
1.11.6 *Steering Assembly*
1.11.7 *Troubleshooting by Symptom*

II. PRINTED CIRCUIT BOARD: THEORY OF OPERATION AND SERVICING ... 9

2.1 *Introduction* 9

2.2 *Power Supply and Buffered Start* 10

2.3 *Oscillator* 12

2.4 *Electronic Latch* 12

2.5 *Credit and Start Circuit* 13

2.6 *Synchronization and Blanking* 16

2.7 *Sound Circuitry* 19
2.7.1 *Screech Sound*
2.7.2 *Crash Sound*
2.7.3 *Engine Sound*

2.8 *Audio Amplifier* 20

2.9 *Dynamics and Speed Control* 20
2.9.1 *Gas (Speed) Circuit*
2.9.2 *Brake Circuit*
2.9.3 *Speed Oscillator*

2.10 *VLdl Signal* 27

2.11 *1 STOP Signal* 28

2.12 *LdlB Signal* 29

2.13 *RESET 1 Signal* 29

2.14 *Steering Control* 29

2.15 *Steering Encoder* 31

2.16 *Crash and Playtime* 31

2.17 *Track Selection* 33

2.18 *Memory Circuit* 33

Table of Contents

2.19 Window Concept *35*

2.20 Introduction to Motion *37*

2.21 Horizontal Count *38*

2.22 Vertical Car Motion *38*

2.23 Horizontal Car Motion *39*

2.24 Car Display *40*

2.25 Race Track Display *40*

2.26 Time and Score Storage *41*

III. SCHEMATICS, DRAWINGS AND PARTS LISTS *45*

I. GENERAL MAINTENANCE AND SERVICE

1.1 INTRODUCTION AND WARRANTY INFORMATION

Le Mans is a race car video game. It simulates the experience of driving a high speed race car around constantly changing race tracks. All the machine controls (steering, gear shift, accelerator and brakes) behave like those of a real car.

The electronics of this game are solid state for long life and low maintenance. The mechanical assemblies (steering, gear shifter and pedals) have been modularly designed for easy removal and servicing.

However, as with all mechanical or electrical devices, there may be minor problems. *If the printed circuit board computer (PCB) fails within the warranty period, contact the distributor from whom the game was originally purchased for repair or replacement instructions.*

Any PCB repair attempted by anyone other than authorized Atari Service Center personnel will void the PCB warranty.

For the Atari warranty on the Le Mans game, please see the inside front cover of this manual.

1.2 ACCESS AND BASIC CONSTRUCTION

Three openings: Coin door, rear door and a removable front control panel—provide convenient access to all sub-assemblies and adjustment points. Opening the coin door exposes all the coin handling equipment—the coin acceptors and rejector linkages, the coin counter and the coin box. The rear door is used to service the TV monitor, the PCB in the RF-shielded box, and the components mounted to the electronics tray—the transformers, fuses, etc.

A pair of interlock switches is mounted to the electronics tray and turns off the entire machine when the rear door is opened. Each switch in the pair shuts off a "hot" lead in the AC line. *The interlock switches protect the operator from accidental shock, so they must always be kept in perfect working order.* If you need to test or adjust the machine with the rear door open, place the interlock switches in the closed or "on" position by pulling out the white actuator shaft.

All the major sub-assemblies have been designed modularly for easy servicing or replacement. The control panel, the pedal assembly, the PCB and the TV monitor can each be removed after the wiring and the release bolts have been removed.

1.3 NEW MACHINE SET-UP AND CHECK-OUT PROCEDURES

Before turning this machine on, inspect it carefully for any damage which may have occurred during shipping.

As each new Le Mans leaves the factory, every component and sub-assembly is carefully checked for proper operation and adjustment. However, since parts may have been damaged or adjustments changed during shipping, the following checkout procedure must be repeated prior to placing the machine on location.

1. With the machine unplugged, open both access doors and carefully inspect both the exterior and interior of the machine for any obvious shipping damage to the cabinet or internal components and sub-assemblies. If any such damage is discovered, contact the carrier and Atari, Inc. immediately. Then contact the distributor from whom the game was originally purchased for repair or replacement instructions.
2. Inspect the interior of the machine more carefully looking for broken or disconnected wires, sub-assemblies pulling loose or not firmly mounted and any foreign objects shorting electrical connections. Pay particular attention to the connections to the TV monitor, the control panel and the coin door. Also make sure that the PCB edge connector and the fuse are firmly seated.
3. Plug in the machine and if the rear door panel is off, defeat the interlock switch by pulling out the white actuator shaft. At this point the CRT (cathode ray tube) should display the race track and the score after a short warm up time. Examine the CRT picture. It should be steady, sharp and exhibit the proper levels of brightness and contrast.

4. Insert several old *and* new coins into each coin acceptor. No genuine coin should be rejected. Pressing the game credit switch (start switch) advances the coin counter one digit. Operate both coin rejector handles and check for any signs of binding or sticking. Finally, check to see that both acceptors are firmly mounted in their frames.

NOTE

Lightly spray both coin acceptors and both sets of rejector linkages with WD-40®, a spray lubricant. This bit of preventative maintenance may save a service call later.

5. Start a game by pressing the start switch button and check for proper game sequence making sure all aspects of the game (steering, gear shifter, accelerator, brakes, score, timer and changing track display) are functioning correctly. If you are not familiar with the game sequence for Le Mans, read the game sequence analysis.
6. Adjusting play time modifies crash mode. The play time is pre-set at the factory for approximately 1 minute 40 seconds, and should not be changed.
7. Both doors (rear and cash) should open and close without binding, and both door locks should turn to the "locked" and "unlocked" positions freely.
8. Check the rear door interlock switch to see that it turns off the machine when the door is opened.

1.4 GAME SEQUENCE

With the game plugged in and the rear door installed, the CRT will display the *attract* mode. The attract mode for Le Mans displays the race courses and a stationary race car positioned where the last player ended, plus the score of the previous game and the game timer (which should read 0). At this point, the *play* mode starts: the score is reset to 0, the timer begins counting down from 78 by twos, the car engine begins idling and is ready to be driven.

The controls of the machine and the movement of the car image simulate those of a real car. Once accelerated, the car becomes increasingly difficult to stop the faster the car is moving.

Turning the steering wheel causes the car to turn in the direction of rotation. The car will turn only while the steering wheel is being rotated.

The gear shifter works exactly like that of a real car. After a crash, shift into first, rotate the steering wheel to turn the car so it will continue in the proper direction and step on the accelerator pedal. Once the engine has revved to its limit, shift into second; when the engine has revved to its limit, shift into third and then fourth. The speed of the car will climb as you shift through the gears. Keep in mind, though, that the engine will "bog down" if you shift up too fast or start out in the wrong gear (2nd or 3rd).

Both the accelerator and brakes have only two positions: on or off. When the accelerator is depressed, the engine will rev up. Stepping on the brake pedal will bring the car to a screeching halt and if the steering wheel is turned as the brakes are applied, the car will skid realistically.

Points are scored only by passing the course check points in the proper sequence as indicated by the arrows on the CRT. The score is displayed at the top next to the game timer.

If the car is driven into any of the pylons, a crash will result. The crash is accompanied by a crash sound, uncontrolled spinning of the car during which time the car cannot be driven. As soon as the crash sound has ended, shift into first and continue driving the car in the proper direction. The game continues in this fashion until the game timer reaches 0 at which point the controls become "dead" and the machine is reset to the attract mode.

Players are given an indication of their skill by matching their score (points) against the "rating card" located on the game. This rating system is based on a game playtime of approximately one minute and forty seconds (as adjusted prior to shipment). If game playtime is readjusted by the operator, this point/rating system is no longer valid.

1.5 ANTENNA WIRE AND ANTI-STATIC MODIFICATION

An *electronic latch* circuit has been incorporated in the Le Mans PCB. One function of this circuit is to turn off or prevent game credit if a player tries to obtain free games by inducing a static charge in the machine. The *antenna wire* is an integral part of this system.

When a static discharge occurs, an electric current is induced in the antenna wire. This impulse is transmitted through the antenna wire to the electronic latch circuit which turns off game credit and resets the computer to the attract mode.

The antenna wire is a length of wire approximately 12 inches long. One end of the antenna is connected to pin K of the PCB edge connector and the other end has been intentionally left not connected.

The length of the antenna wire has been pre-adjusted by the factory to the overall optimum length, however some environments may require more or less critical adjustment.

Lengthening the antenna wire increases the sensitivity of the circuit; cutting the wire shorter decreases the sensitivity.

If players are obtaining free games by including static charges in the machine, lengthen the antenna wire (add a piece of wire) by a few inches so that a lesser charge will turn off game credit. If you have problems with static charges accidentally turning off game credit during the progress of a legitimate game, try cutting the antenna shorter in increments of 1-2 inches. Try to cut only the minimum amount off the antenna, otherwise players may be able to obtain free games.

The anti-static modification may be tested during a game by touching the end of the antenna wire with your finger as the body usually has enough capacitance to actuate the electronic latch. If the game is shut off, the circuit is functioning correctly.

1.6 TV AND LIGHTING: SERVICE PROCEDURES

Use the following procedures to replace the general illumination lamps, the plexiglass screen and bezel and to service the TV monitor.

1.6.1 General Illumination Lamps:

A fluorescent 18-inch fixture is mounted behind the plexiglas screen to illuminate the Le Mans display panel. To replace the burned-out tubes, reach in the rear door and unscrew the four lamp PC board mounting screws; unplug the two wires that are attached to it at plugs near the upper left inside area of the cabinet. Remove the panel and replace burned-out lamps with the same size and type of tube. The two small bulbs for signalling extended play are type-GE47 lamps.

1.6.2 Plexiglas Screen:

Use the above procedure to remove the lamps PCB. Then remove the three wing nuts and carriage bolts that hold down the upper aluminum plexiglas screen retainer. Lift out the plexiglas.

1.6.3 Bezel:

Use the above two procedures to remove the plexiglas; the bezel will simply lift out.

1.6.4 TV Monitor Removal:

To remove the entire TV monitor assembly, remove the four Phillips-head bolts and nuts found on the top of the monitor frame. *Do not remove the aluminum angle brace at the bottom edge.* Disconnect the electrical connector to the TV, and lift out the monitor very carefully. DISCHARGE THE SECOND ANODE BEFORE SERVICING.

1.6.5 TV Monitor Adjustment:

The TV monitor and its adjustment controls function like any normal TV set with the exception of the sound which is adjusted on the PCB. The monitor is serviced through the rear door of the machine.

(a) Brightness: Adjust the brightness *before* the contrast. Adjust so that the CRT background is as *dark as possible.*

(b) Contrast: The contrast is adjusted so that the CRT images are *as bright as possible* against the pre-adjusted dark background *without being blurred.*

(c) Vertical Hold: Adjust only *if the picture appears to be rolling* up or down the screen. Adjust for a stable centered picture.

(d) Horizontal Hold: Adjust *if the picture is slightly off center horizontally,* if the images appear *warped or* if the picture is *broken into a series of diagonal lines.*

(e) Vertical Size: Adjust only *if the top and bottom of the race course is cut off* from the screen or if there is too much distance between the edge of the course and the edge of the screen, which will appear as an extra set of horizontal dotted lines on the top and bottom of the CRT display. Adjust for maximum picture size.

(f) Vertical Linearity: Change this adjustment *only if the top of the picture seems compressed.*

(g) The Yoke: The yoke should never need adjustment unless the adjuster have been tampered with or the machine damaged. If yoke adjustment is indicated, adjust both yoke rings *simultaneously* for optimum centering of the race course on the CRT.

(h) The A.C. Voltage Switch: Set this switch to the 115 Volt position ("115" visible on the switch) if the machine is connected to a 115 volt source. *The TV monitor will not function if this switch is misadjusted.*

(i) The TV Monitor Fuses: Two 6/10 Amp, 125 volt Slo-Blo fuses (313 3AG) protect the TV monitor from electrical overload. Replace blown fuses *only* with those which have the above rating.

NOTE

The TV is not fused by the fuse on the electronics tray.

1.7 COIN DOOR: SERVICE PROCEDURES

All coin handling equipment is accessible through the front door. To collect the coins, open the door, remove the coin box and record the meter reading.

The Le Mans is equipped with two coin acceptor assemblies so the entire machine will not be out of service if one acceptor is malfunctioning.

Please keep in mind that proper adjustment and lubrication of the coin handling equipment will help minimize your service calls.

1.7.1 Door Lock:

The lock cylinder can be withdrawn and replaced after the rear retaining nut and the lock cam are removed. If the coin door does not fit tightly or the lock does not turn freely, try bending the lock cam slightly with a pair of pliers.

NOTE

The lock cylinder should be lubricated once every three months or so with graphite or WD-40®.

1.7.2 Reject Linkage:

A separate reject button operates the wiper lever of each coin acceptor. When this button is pushed in, the wiper lever of the coin acceptor is operated which should dislodge any coins "stuck" in the acceptor. The rejector button cannot be removed.

NOTE

Lubricate the rejector linkage with silicone grease when you receive the machine and thereafter at approximately six month intervals.

1.7.3 Coin Micro Switches:

To remove a malfunctioning micro switch, unscrew the two retaining screws, record the wire positions and pull off the slip-on connectors.

1.7.4 Coin Acceptors:

The coin acceptor can be removed for servicing after the retaining screw has been removed.

1.7.5 Acceptor Adjustment:

All coin acceptors leave the factory adjusted for maximum performance. However, if more critical adjustments are necessary or if the unit has been completely disassembled for service, the following adjustment procedure is suggested:

(These tests and adjustments are performed with the acceptor in a vertical position on a level surface in the rest position.)

(a) Kicker and Separator

1. Set the unit with the back of the acceptor facing you in the test position.
2. Loosen the screws holding the kicker and the separator and move both the kicker and the separator as far to the right as they will go. Tighten the screws.
3. Insert several test coins (both old and new) and note that some are returned by striking the separator.
4. Loosen the separator screw and move the separator a slight amount to the left. Tighten the screw.
5. Insert the test coins again and, if some of them are still returned, repeat Step #4 until all the coins are accepted.
6. Loosen the kicker screw and move the kicker as far to the left as it will go. Tighten the screw.
7. Insert the test coins and note that some are returned.
8. Loosen the kicker screw and move the kicker a slight amount to the right.
9. Insert the test coins again and, if some are still returned, repeat Step #8 until all the coins are accepted.
10. Be sure that both screws are tight after the adjustments have been made.

(b) The Magnet Gate

1. Set the acceptor with the front of the unit facing you in the test position.
2. Turn the magnet gate adjusting screw out (counterclockwise) until none of the coins will fit through.
3. With a coin resting in the coin entrance of the acceptor, turn the adjuster in (clockwise) until the coin barely passes through the magnet gate.
4. Test this adjustment using several other coins (both old and new) and, if any of them fail to pass through the magnet gate, repeat Step #3 until all of the coins are accepted.
5. Fix the magnet gate adjusting screw in this position by tightening down the magnet gate screw lock nut.

1.7.6 Acceptor Maintenance:

Depending on the environment in which the acceptor is used, periodic preventitive maintenance should be performed.

The mainplate may be cleaned with any non-abrasive household cleaner. Rinse and dry thoroughly to remove deposits and film.

Remove all metal particles from the magnet by guiding the point of a screwdriver along the edges of the magnet.

Remove the transfer cradle and clean the bushing and pivot pin. A pipe cleaner is an effective cleaning tool. Apply powdered graphite or pencil lead to the pin and bushing and reassemble.

Spray the entire unit lightly with WD-40® or a silicone lubricant.

1.8 ELECTRONICS TRAY SUBASSEMBLIES: SERVICE PROCEDURES

(Pull out the power cord while performing procedures 1-4.)

1.8.1 Fuse Replacement:

Replace the bad fuse with a Slo-Blo fuse rated at same amperage, 125 volts (313 3AG).

1.8.2 Transformer Replacement:

To remove a malfunctioning transformer remove the AC protective cover, record all wire colors and their positions, unsolder the wiring and unscrew the retaining screws.

NOTE

When installing the new transformer, be sure to reconnect the chassis ground wire (lugs fastened with wood screws that mount the transformers to the wood electronics tray).

1.8.3 Interlock Switches:

To remove the switches, pull off each push-on connector, squeeze in side tabs on the switch and push it through the mounting bracket.

1.8.4 Printed Circuit Board:

To remove the PCB from the RF-shielded box, pull the board straight out.

CAUTION

PCBs are extremely fragile and require very careful handling.

1.8.5 PCB Adjustments:

(a) Volume: This adjustment is made by a small blue trim pot marked "volume" near PCB position B9. Adjust the volume to the preference of the location but keep in mind that the machine may sound louder with the door off.

(b) Play Time: This is factory adjusted for the optimum time. In the case of repair or accidental misadjustment, the play time is adjusted as follows: turn the pot near position B8 *clockwise* (while facing the engraved arrow) to *lengthen* game time. This pot controls both the total game length and the crash time period. The play time counter (to the right of the lap score in the pit area) always begins counting down from 78 by twos. Adjusting the play time pot causes the game counter to count down slower or faster.

NOTE

Adjusting for a longer game will also increase the length of the crash time, and affect score interpretation per the "rating card" posted on front of the CRT. Ninety seconds is the optimum adjustment. Shorter or longer play times will result in decreased revenue.

(c) Extended Play Switch Adjustment: The extended play time high score rollover is operator-selectable at scores of 46, 50, 56, 60, 66, 70 or 76. See Region B2 on sheet 1 of the schematic for exact

switch settings (the DIP switch is near location N1 on the printed circuit board). To disable extended play, place all switches *off*. Only *one* switch of the seven should be enabled at a time.

1.9 MECHANICAL CONTROLS: SERVICE PROCEDURES

1.9.1 Control Panel:

To service the rear of the control panel, reach through the coin door and remove the four wing nuts behind the panel. The control panel can then be lifted out and away.

1.9.2 Gear Shifter Assembly:

To remove gear shifter from the control panel, first open the control panel as per procedure #1. Then record the wire colors and their positions for later reference and pull off all the slip-on connectors to the shift switches. Shift assembly can be withdrawn through the front of the control panel after the four retaining screws have been removed.

To open the gear shifter assembly, remove the four machine screws while holding the housing halves together with your fingers. Split the housing halves carefully so internal parts will not spring out and become lost. With the housing halves separated, the gearshift rod, spring, ball, detent and switch actuators will all be accessible.

NOTE

When re-assembling the unit, lubricate the ball with a small amount of silicone grease, and be sure that you replace the housing screws the same way they came out.

1.9.3 Pedal Assembly:

The pedal assembly must be removed to replace the brake and accelerator switches. Reach in the rear door and remove three wing nuts. From the front of the machine, grasp the protruding lip of the pedal assembly and pull out the entire unit.

To replace pedals, remove the four pedal retaining screws and lift off pedal. To replace switches, reach through the bottom of the pedal box and remove the wires and the two screws. Be sure to record all wire colors and positions before removing them from the switches.

1.9.4 Steering Wheel Assembly:

To service or remove steering wheel assembly, open the control panel as per procedure #1. To replace the wheel, remove the shaft end nut. Lift off the slotted tack ring and withdraw the steering wheel through the front of the control panel. If only the wheel needs replacement, remove the cap and the shaft. The cap will lift off when retaining screws are removed, and the shaft can be disassembled when retaining nut is removed.

NOTE

When reassembling the unit, lubricate the bearings with a small amount of silicone grease. When re-installing the shaft, be careful not to push out the rear bearing. Tighten shaft end nut.

To replace the steering assembly PCB, remove shaft end nut and tack ring. The PCB can be replaced after the retaining screws are removed.

To replace the steering wheel bushing assembly, use procedure 4 to remove the steering wheel, then remove the six retaining screws that hold the backing plate to the control panel. Withdraw the bushing assembly through the front of the panel.

1.10 REGULAR MACHINE MAINTENANCE

Due to its solid-state circuitry, your game will require very little maintenance other than periodic cleaning, lubrication and TV monitor adjustment.

The cabinet and plexiglas screen may be cleaned with any non-abrasive household cleaner. The coin acceptors, rejector linkages and the lock cylinders should be lightly sprayed once every three months with WD-40® or a spray lubricant. The TV monitor is adjusted *only* if the CRT picture is distorted or if the contrast or brightness are out of adjustment.

1.11 TROUBLESHOOTING PROCEDURES

The first step in any troubleshooting procedure is to correctly identify the observable symptoms of the malfunction. With these clues in mind, examine the areas of the machine which might cause these symptoms.

It is helpful for troubleshooting purposes to isolate three areas:

1.11.1 TV Monitor:

Many TV problems can be rectified with proper TV adjustment. However, if the problem persists or if the TV is undoubtedly malfunctioning, contact your distributor or remove the TV monitor and take it to a competent local TV repair shop. Complete TV

monitor repair manuals are available from your distributor.

1.11.2 Printed Circuit Board:

Most PCB repairs may not be within your scope. If you can positively determine that your PCB computer has failed, contact the distributor from whom you purchased the game for repair or replacement instructions. Please be aware that some symptoms which might appear as PCB malfunctions may be the result of improper TV monitor adjustment or misadjustment of the small blue trim pots located on the PCB. *Do not attempt to repair the PCB yourself unless you have been specifically instructed to do so by your distributor.* To do otherwise will void your PCB warranty.

1.11.3 Wiring Harness:

For troubleshooting purposes, the harness includes the line cord, the fuse, the A.C. line filter, the transformers, the interlock switch, the antenna wire, the start and coin switches, the steering assembly, the gear shifter, the pedal assembly, the PCB edge connector, the TV monitor, the speaker and all the interconnecting lengths of wire. A wiring enclosure diagram of the wiring harness and associated components has been included at the end of this manual to aid in troubleshooting.

1.11.4 General Suggestions:

Following are some specific instructions and suggestions for troubleshooting your LeMans. To perform even the most simple troubleshooting procedures, you must have a VOM (Volt-Ohmeter) and, if possible, a VTVM (Vacuum Tube Volt Meter) or digital voltmeter. It is also very helpful to have another LeMans game (or a spare TV monitor and PCB) available for substitution purposes.

For many problems, *substitution* may be the easiest way to troubleshoot the machine. For example, if you suspect a PCB malfunction, try substituting another and known-to-be-good PCB. If the malfunction disappears, the first PCB must have been cause. Conversely, if the malfunction persists, the cause of the malfunction must be located in either the TV or the harness.

The TV monitor can also be checked by substitution. Simply connect the game to a known-to-be-good monitor and if the malfunction is cleared up, the first monitor must have been the cause.

Harness must be checked by elimination. Substitute a known-to-be-good TV and PCB, and if the malfunction persists, the harness and associated mechanical or electronic equipment must be at fault.

1.11.5 TV Monitor Troubleshooting:

Some typical TV problems are distorted display, raster only or no video at all.

If you do not have a raster (a raster is a lighted but blank TV screen with the brightness turned all the way up), begin checking the power supply to determine if the TV is getting power. If the general illumination lamps of the machine are lighted, at least you know that power is reaching the machine. If not, check your line cord, interlock switch, fuse, etc.

If it is A.C. powered, go around to the back of the machine and with the rear door open (and interlock switch defeated) listen for a hum emanating from the monitor. If there is a hum, the monitor is powered and you may have a defective CRT or similar problem. Another test (and one which can be performed in a noisy environment) is to measure the voltage between the TV fuses and ground. If your voltmeter reads 110 volts or more, you know the monitor is powered. If not, check the fuses, the TV connections and the harness to see why power is not reaching the monitor. If the TV is powered but still not functioning, check the TV AC voltage switch which should be set to the "115" position ("115" visible on the switch) if it is connected to a 110-volt line source.

If you have the correct voltage after the fuses, but the monitor still will not function, you have two choices: 1). Remove the monitor and take it to a specialist, or 2). turn to the TV schematic and start exploring the monitor with a VTVM and an oscilloscope.

If you do have a raster, you must determine why there are no video signals being displayed on the screen. These video signals are generated by the PCB computer and enter the monitor through pin 1 of the TV monitor connector.

1.11.6 Steering Assembly Troubleshooting:

Two small red LEDs have been included on the main PCB near position H8 to aid in troubleshooting the steering electronics.

Mounted on the small steering assembly PCB are two phototransistors and two infrared light-emitting diodes. The phototransistors are mounted behind the tack ring in such a way that the slots in

the wheel break up the light emitted from the diodes. This generates pulses which are used by the computer to determine how quickly and in which direction the wheel is being turned.

The test LEDs on the main PCB will light whenever the infrared diodes are stimulating the phototransistors (i.e., whenever the diodes are shining through the slots in the slotted wheel onto the transistors).

To test the steering wheel assembly, simply rotate the wheel slowly in both directions while watching the two red LEDs on the main PCB. If your steering assembly is alright, both LEDs will flicker. If both of the LEDs fail to light (or remain lit constantly) while wheel is being turned, you definitely have a malfunction *before* the main PCB, which may be either in the wiring harness or in the steering assembly PCB.

1.11.7 Troubleshooting by Symptom:

(a) No Power: Check for correct line voltage and if O.K. then check the fuse on the electronics tray, interlock switch and the transformer primaries.

(b) No TV Picture: Check for power as per procedure #1 (NO POWER) and if alright, check TV connector and TV fuses. Measure voltage at TV fuses (should be 110 VAC) and if alright, replace the TV monitor.

(c) TV Raster Only: Check the harness and especially the PCB edge connector. If alright, check the TV as per the special test under "TV Monitor Troubleshooting." Or check TV or PCB by substitution.

(d) TV Picture Rolls: Adjust the TV vertical hold and if the rolling persists, check the TV or the PCB by substitution.

(e) TV Picture Is Wavy: Adjust the TV horizontal hold and if the problem persists, try replacing the transformer (in the TV monitor itself).

(f) TV Picture Is Broken Into Diagonal Lines: Adjust the TV horizontal hold and if the problem persists, check the TV or the PCB by substitution.

(g) No Game Start: Check the coin switches, the start switch, the harness and replace the PCB if necessary.

(h) Game Shuts Off Accidentally: Try cutting the antenna wire shorter in increments of 1-2 inches.

(i) Picture Shrinks: Check the line voltage with your VOM and be aware that a large motor starting up (i.e., an air conditioner) may drop the line voltage. Check to see that machine is firmly plugged in. If the problem only occurs at certain times of the day (especially at dusk), your trunk line voltage may be dropping.

(j) No Audio: Check the volume control, speaker connections and for 20 volts. If the problem persists, test the speaker, and if the speaker is alright, try replacing the PCB.

(k) Game Sequence Incorrect, Parts of Race Course, Car, Score or Timer Missing or Distorted: Replace the PCB or check for proper power supply.

(l) Car Will Not Steer or Turn in One Direction Only: Check PCB LEDs as Subparagraph 1.11.6 and if alright, then replace the PCB computer. If LED test is alright, check steering harness and connections and for foreign matter in steering assembly. Replace steering PCB if necessary.

(m) No Brakes: Check brake switch and wires from brake pedal switch to PCB. If alright, replace the PCB.

(n) Brakes All The Time: Check brake switch for foreign material and/or shorting terminals.

(o) No Accelerator: Follow procedure n for "No Brakes."

(p) Accelerator All The Time: Follow procedure o.

(q) All Four Gears Dead: Check connections and wires from gearshifter to PCB and if alright, replace the PCB.

(r) One, Two, Three or Four Gears Dead: Check the connections and harness of the malfunctioning gear(s): check the shift switch(s) for the malfunctioning gear(s). If problem persists, replace the PCB.

II. PRINTED CIRCUIT BOARD: THEORY OF OPERATION AND SERVICING

2.1 INTRODUCTION

Le Mans is a fairly complex video game, and the operation of the circuitry must be learned before your troubleshooting attempts will be successful. However, after the basic differences are understood, it should prove no more difficult than any other Atari PCB.

The main differences between Le Mans and previous Atari games are the steering circuitry, the ROMs and the power supply.

The steering circuitry is a novel bit of engineering which employs phototransistors and infrared light-emitting diodes to generate pulses indicating the direction of steering wheel rotation. Fortunately, it is quite a simple circuit and easy to troubleshoot.

The ROMs are other chips which has been specially programmed for Le Mans and it is used to generate the information for displaying of the car, score, game timer, and race tracks. Troubleshooting the ROMs is probably one of the easiest tasks because it involves only unplugging the suspected chip and replacing it with a known-to-be-good ROM.

The power supply is more complicated because additional voltages are needed to operate the ROM, the hybrids and the on-board audio amplifier. Even though there are a few more voltages to check, the basic power supply troubleshooting methods remain unchanged.

Because of this new circuitry, more test equipment is required to check the PCB. An oscilloscope is an absolute necessity and a logic comparator would be a wise investment.

2.1.1 Test Equipment

Some of the following instruments are absolutely *essential* to fully test the PCB; others are desirable because they make the test procedures easier, but are not essential. Many of these items are available from the Atari Customer Service Department, 2175 Martin Ave., Santa Clara, CA 95050, and these items are indicated by an asterisk. A few others are available only from electronics supply houses or rental agencies; however, if you have difficulty in obtaining any needed instrument, contact our Customer Service Department for assistance.

(a) Required Equipment:

1. LOGIC PROBE*: The logic probe is an instrument designed for checking the outputs of integrated circuits. We recommend the Kurz-Kasch Logic Probe, model #LP-520.

   The logic probe will indicate if a signal is a logic high, low or changing from one state to the other. Consult the operating instructions included with the unit for further details on its operation.
2. VIDEO PROBE: The video probe is a simple, but useful, testing device. It consists of two IC test clips (or one clip and a test prod), a length of wire and a 4.7K, ¼-W carbon resistor. Video probes can be assembled from standard parts available at any electronics supply house.

   To use the video probe, attach one clip to the negative side of the video coupling capacitor (C44) and clip or touch the other end to the desired signal test points as indicated in the following pages. The VP will display the signal directly on the CRT.
3. OSCILLOSCOPE: The oscilloscope is used for viewing various waveforms. Our application requires at least a 50-MHz scope and we recommend using a dual trace unit to facilitate comparison between waveforms. Our specific recommendation is the Tektronix model #465, 100-MHz dual trace oscilloscope.
4. THE TEST FIXTURE: Le Mans test fixtures are available from the Atari Customer Service Department. You may wish to fabricate your own unit. This should not prove too difficult and will familiarize you with how the machine is built. You will need a TV monitor, transformers, an AC line filter, a steering assembly, a gearshifter, a few momentary contact switches and a PCB edge connector. Use the push button switches to replace the coin, gas and brake switches in order to reduce the size of the unit. Follow the plan of the wiring harness schematic and the enclosure wiring diagram when assembling the components.

(b) Optional Equipment:

1. THE LOGIC COMPARATOR*: This compact troubleshooting instrument will prove invaluable in verifying correct IC operation. The unit simply clips onto in-circuit ICs and instantly displays any logic state difference between the in-circuit test IC and the reference IC in the comparator. Logic differences are identified to the specific pin by a lighted LED.

   If this instrument is purchased from the Atari Customer Service Department, it will be shipped with 20 pre-programmed reference boards. If the instrument is purchased elsewhere, you will have to program the boards yourself.

   We recommend either the HP 10529A comparator or the Fluke comparator.
2. THE LOGIC PULSER*: The logic pulser is used to stimulate in-circuit ICs so they are driven to their opposite states and we recommend the HP 10526T pulser.

2.1.2 Troubleshooting Suggestions

The first step in the troubleshooting process is to correctly identify the observable symptoms of the malfunction and then to narrow down the possibly malfunctioning areas as much as you can. This should reduce the situation to one or two functional blocks which might be at fault. Then start examining these functional blocks with your test instruments and compare the results with the operational analysis and test point information under the heading of that functional block.

Keep in mind, however, that the first observable symptoms of a malfunction are not necessarily due to the functional block which produced those symptoms. A failure in one part of the PCB may affect much—if not all—of the PCB.

Some malfunctions may produce symptoms which are not clearly attributable to one component. Sync problems can be especially nasty in this regard because you can spend quite some time verifying the presence of correct sync signals on the board only to discover it is the monitor which is distorting sync.

This brings us to another subject: substitution as a troubleshooting technique. For instance, to clearly identify which component is at fault in a sync problem, try substituting a known-to-be-good TV monitor. If you have built a test fixture, plug the suspected board into the fixture and if the sync problem disappears, the other TV must have been the cause. Conversely, had the problem not disappeared, the substitution test would have revealed a malfunctioning board and you would begin the troubleshooting process at the sync section.

The same technique can be used to test the ROM which is inserted in a plug-in type receptacle to facilitate the substitution test. If you have a problem with the car image, the race track display or the score or timer displays, try inserting another and known-to-be-good ROM and if this clears up the malfunction, leave it there. However, we must note that the ROM failure rate has been extremely low, so it is more likely that a display problem is located in either the ROM address circuitry or the display circuits.

There are a few other problems which need mentioning because, while they may at first appear to be board-related, closer examination will reveal they are location-related.

If the line voltage fluctuates enough, the electronic latch will turn off game credit. One cause of this may be a large load connected to the same line as the machine. For example, a large air conditioner while starting up may drop the line voltage enough to break the electronic latch. Another cause may be that the line voltage drops at certain peak times of the day, such as dusk.

The location power supply is suspect in any malfunction which occurs on an intermittent basis.

Another game credit problem which may be either constant or intermittent in nature is a maladjusted antenna wire. The antenna wire is connected to the electronic latch and if the wire is too long, game credit may be accidentally turned off, especially if the machine is in a carpeted location. For more information on the antenna's functions, see Paragraph 1.5 in Section I of this manual.

2.2 POWER SUPPLY AND BUFFERED START

+5 volts is used to power most of the ICs; however, the ROM requires −12 volts, and the dynamics and sound require −5 volts, +5 volts, +12 volts, and −12 volts. The +18 volt source is used only to drive the audio amplifier. A separate +5 volt regulator is used for the video output circuit.

The four circuits which generate the different voltages are very similar, as you will see. First, the 110 VAC line voltage is stepped down by the transformer(s) to 32 VAC and 16 VAC. These secondary voltages are then processed by the on-board power supply components to create the following voltages:

+5 Volts: To create the regulated +5 volts needed by the ICs (and other components as well), the AC waveform at edge-connector pins 2 and B (16 volts) is full-wave rectified by diodes CR4 and CR5. The resulting DC voltage is then filtered by capacitor C4 and then regulated to a constant +5 volts by the LM309 voltage regulator.

+18 Volts: The AC waveform at pins 3 and C (32 volts) is rectified by CR7 and CR9, filtered by C49 dropped 2.1V, and taken directly to the audio amplifier.

−12Volts: Because the cathodes of CR6 and CR8 are wired to the transformer secondary, the resulting voltage will be negative with respect to ground. This waveform is filtered by C15 and then lowered to −12 volts by R19. The resulting voltage is regulated by a −12V three terminal regulator.

−5V, −12V, +5V Video: These all use three terminal regulators.

The Pull-Up Resistors: The pull-up resistors (R6, R15, R69, etc., and denoted by the schematic symbol "P") are used to provide a logic high source for inputs to ICs which need to be tied high. The resistor limits the total current drain through the LM309.

Buffered Start: In order to prevent a high and possibly destructive inductive kickback when the coil of the game counter is de-energized, a buffered start circuit has been incorporated so that the game counter is now tripped by a silicon-controlled rectifier (MCR 106-1).

The coin switch NC contact is connected to the gate input of the rectifier. When the signal goes high, the silicon-controlled rectifier conducts, thereby energizing the coil of the game counter. On the next half-cycle of the AC current, the rectifier is shut off by the AC waveform and the coin is de-energized.

POWER SUPPLY TEST POINTS

TP 1: OSCILLOSCOPE: 32 VAC
VOM/VTVM: 32 VAC

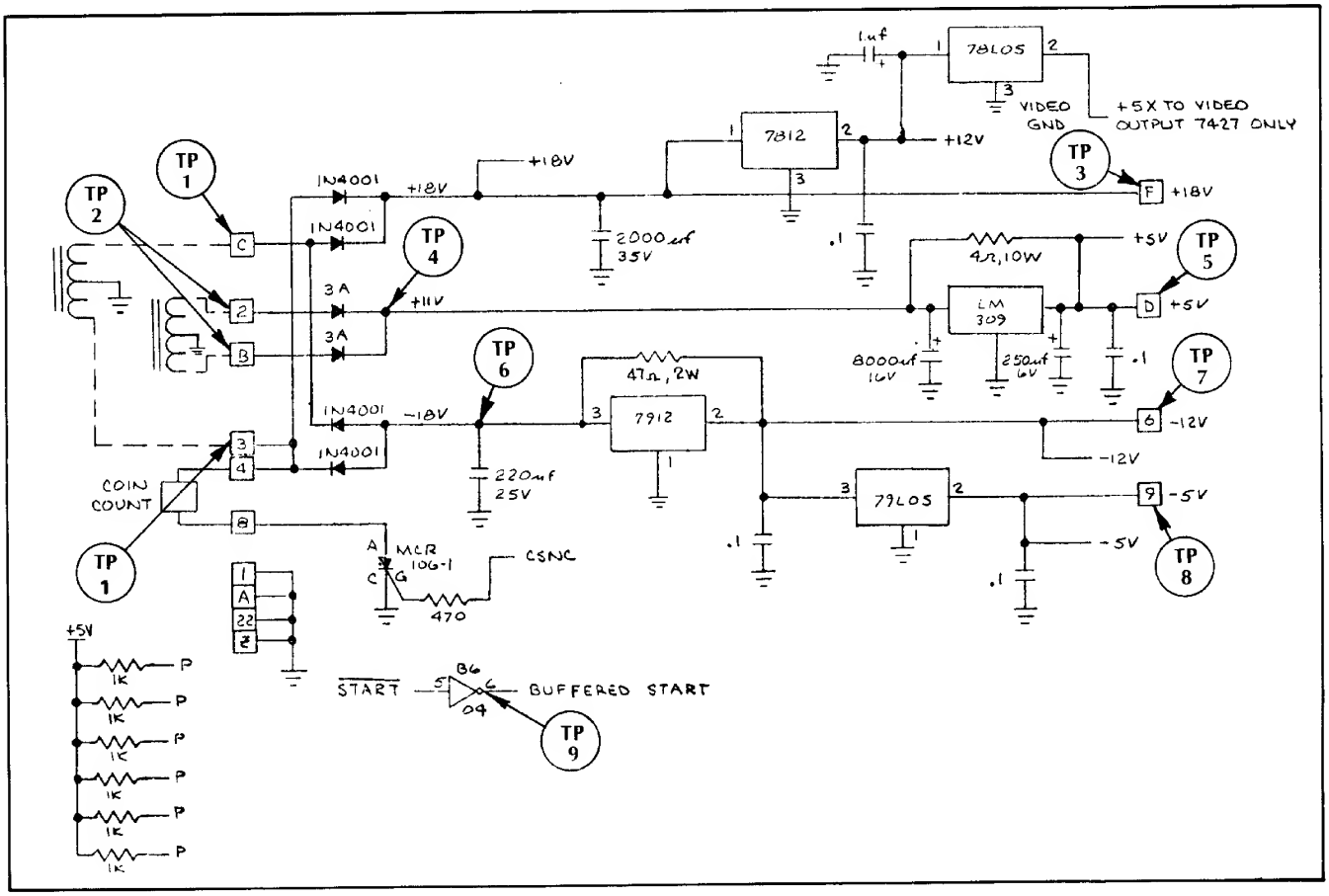

Figure 2-1 Power Supply and Buffered Start

TP 2: OSCILLOSCOPE: 16 VAC
VOM/VTVM: 16 VAC

TP 3: OSCILLOSCOPE: +18 VDC
VOM/VTVM: +18 VDC

TP 4: OSCILLOSCOPE: 8.5 VDC
VOM/VTVM: 8.5 VDC

TP 5: LOGIC PROBE: High
OSCILLOSCOPE: +5 VDC
VOM/VTVM: +5 VDC

TP 6: OSCILLOSCOPE: −18 VDC
VOM/VTVM: −18 VDC

TP 7: OSCILLOSCOPE: −12 VDC
VOM/VTVM: −12 VDC

TP 8: OSCILLOSCOPE: −5 VDC
VOM/VTVM: −5 VDC

TP 9: LOGIC PROBE: High pulse when the start switch is operated.
OSCILLOSCOPE: High pulse when the start switch is operated.

OSCILLATOR TEST POINTS

TP 12: LOGIC PROBE: High, low and pulsing.
OSCILLOSCOPE: 14-MHz sine wave.

TP 13: LOGIC PROBE: High, low and pulsing.
OSCILLOSCOPE: Same as TP 12, except out of phase.

2.3 OSCILLATOR

Since the operation of the computer is synchronous, it requires a master timing signal which is provided by the oscillator and known as the clock.

The crystal oscillator generates a 14.318-MHz frequency and it is kept oscillating by two "closed loop" amplifiers which consist of a 330-ohm, ¼-watt feedback resistor and an inverter. These amplifiers are coupled together by a .1μf capacitor (C46), and they operate out of phase with respect to each other.

Inverter A8 pins 3 and 4 is used as a buffer-amplifier; inverters A8 pins 5 and 6 and A8 pins 8 and 9 expand the oscillator's loading capacity.

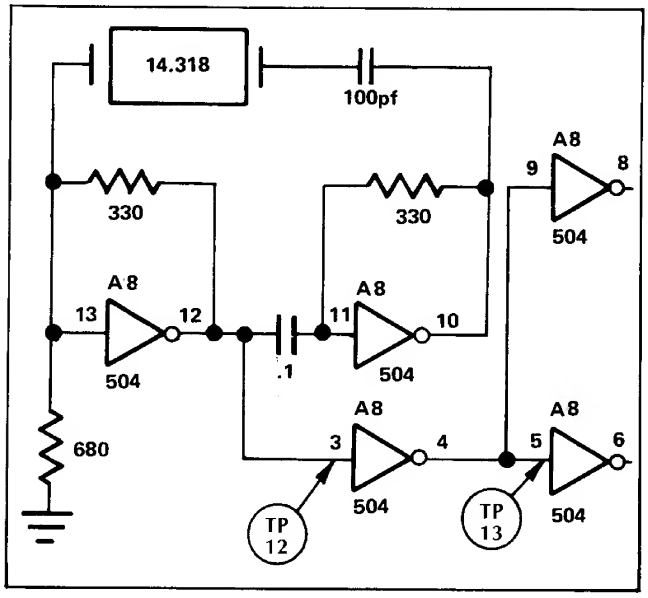

Figure 2-2 Oscillator

2.4 ELECTRONIC LATCH

The electronic latch permits the starting of a new game when the coin is deposited and prevents the start of a game if the player attempts to obtain free game credit by inducing a static charge in the machine.

The control of game credit is accomplished by the presetting of the attract flip-flop C7 (see Paragraph 2.5 in this manual). Whenever the output of the latch circuit—signal Q—is high, the attract signal will also be high. If the attract signal goes high, the computer is reset back to the attract mode and the game ends. In order for the game to begin, the electronic latch must be "latched" and signal Q must be high.

The latch cycle is started when $\overline{\text{COIN}}$ (the normally high output of the credit circuit) goes low as the coin is deposited. This low takes the base of transistor Q[illegible] low, which causes the collector of that transistor to go high. Q[illegible] then conducts that voltage and biases the base of Q[illegible], allowing Q[illegible] to conduct the low from its emitter to its collector. Since the collector of Q[illegible] is tied to $\overline{\text{COIN}}$, it keeps the latch circuit low even after $\overline{\text{COIN}}$ returns high as the coin switch is released. The circuit is now said to be "latched" and will remain in the latched condition until shut off by a low R signal or a high antenna signal.

R is the credit signal from B7 pin 6 in the credit circuit. A low R drags the base of Q2 low, and since Q2 can no longer conduct, the latch cycle is broken. This toggles the attract flip-flop and resets the computer to the attract mode.

The same type of process is used to prevent players from gaining free game credit by inducing a static charge in the machine. When a large enough static charge is discharged to the machine, the antenna wire picks up the necessary current to create a high at the base of Q3. This causes the low at the emitter to be conducted to the collector. Since the collector is connected to the base of Q1, a low Q3 collector will prevent Q1 from conducting and will break the latch cycle.

ELECTRONIC LATCH TEST POINTS

TP 14: LOGIC PROBE: High going low when coin switch is operated.
OSCILLOSCOPE: Same as Logic Probe.

TP 15: LOGIC PROBE: High during game and low at game over.
OSCILLOSCOPE: Same as Logic Probe.

TP 16: OSCILLOSCOPE: +5 volts until coin switch is operated; then drops to approximately +4 volts.

TP 17: OSCILLOSCOPE: 0 volts until coin switch is operated, at which time it rises to +.8 volts and remains there until game over.

TP 18: LOGIC PROBE: High during game mode; low during attract mode.
OSCILLOSCOPE: Same as Logic Probe.

2.5 CREDIT AND START CIRCUIT

The credit portion of this circuit records the deposit of the coin and lights the credit lamp. This provides game credit to the start circuit which is

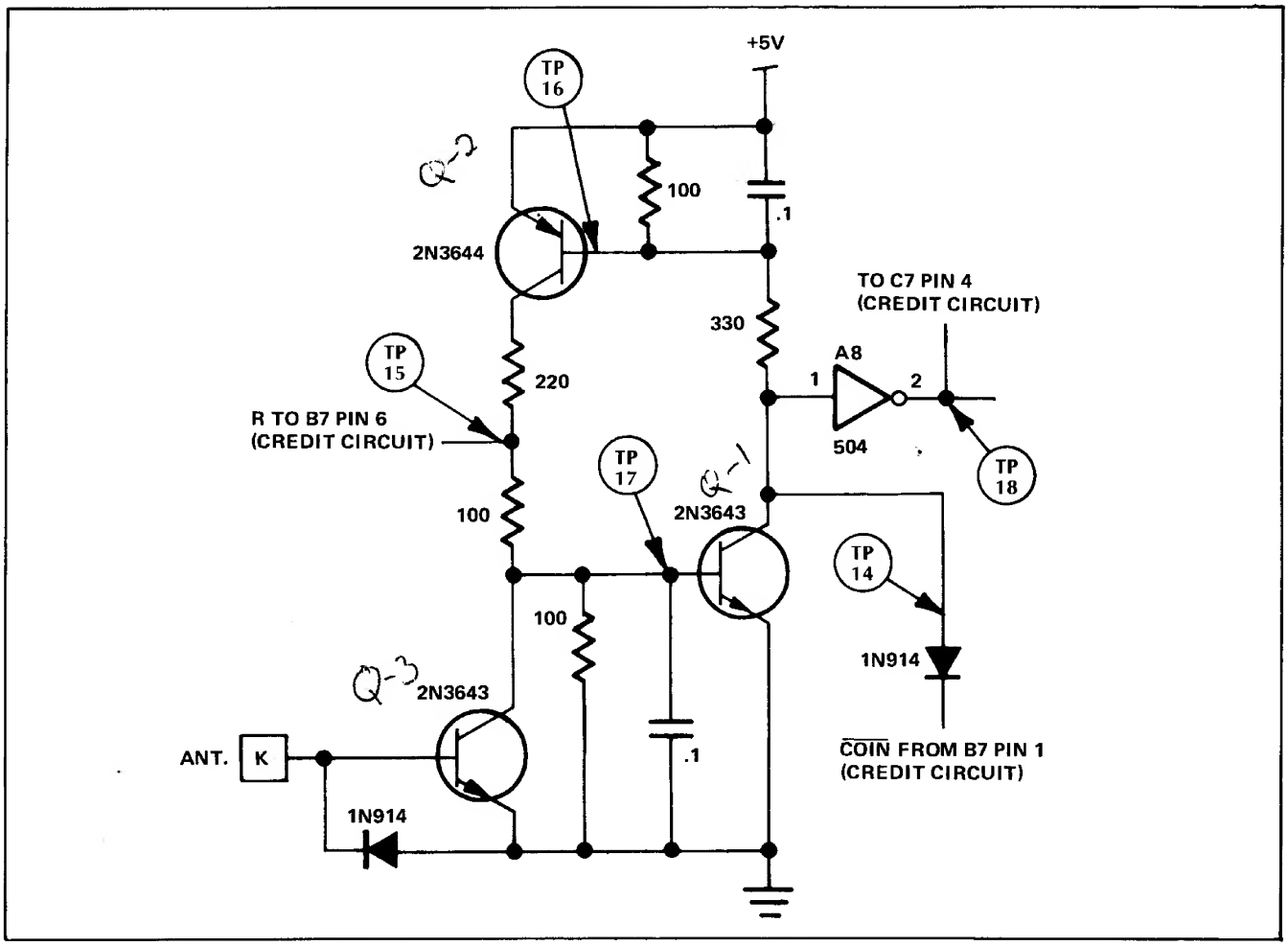

Figure 2-3 Electronic Latch

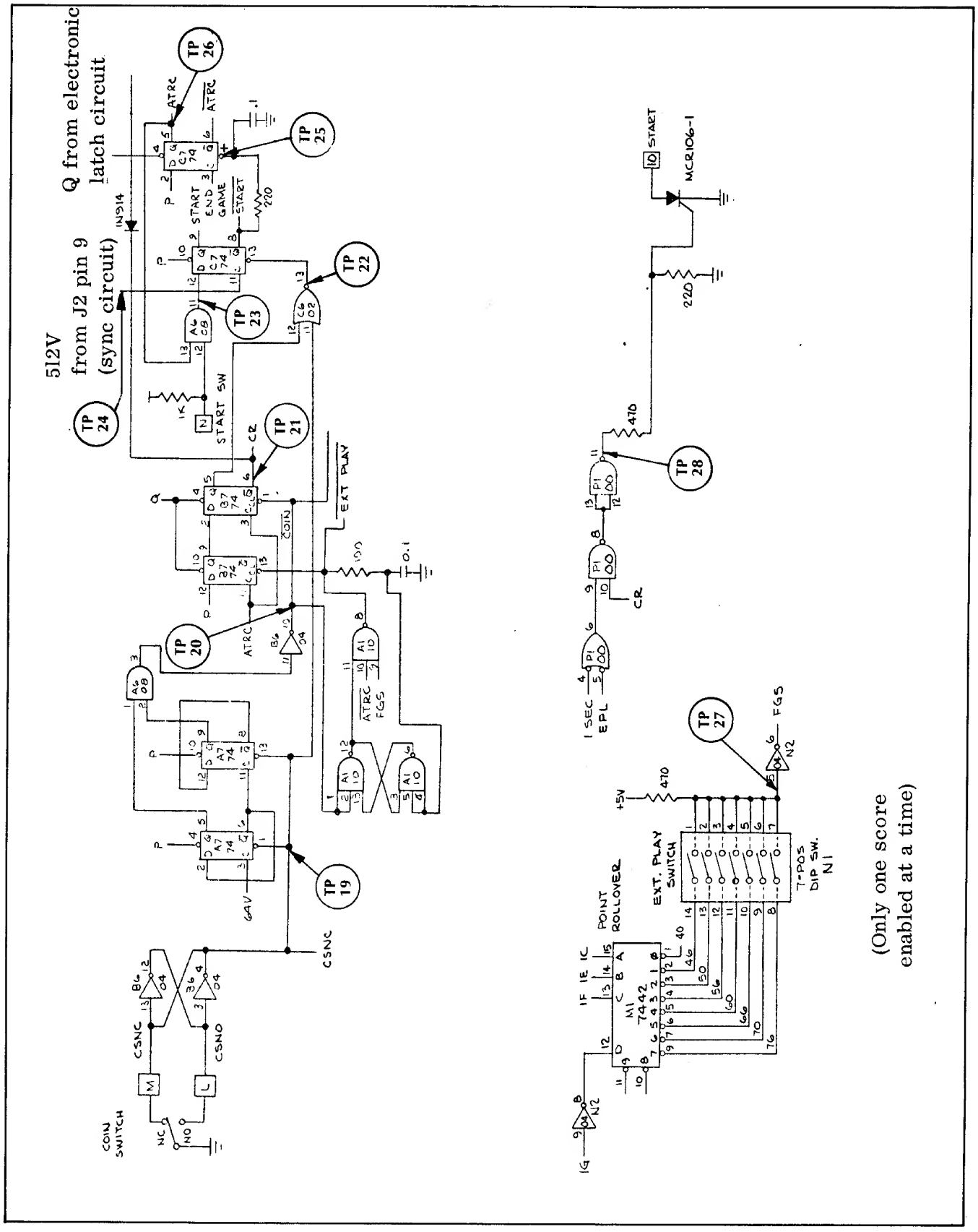

Figure 2-4 Credit and Start Circuit

operated by the player to reset the PCB and begin the new game.

The deposited coin closes the normally-open side of the coin micro-switch, and the outputs of this switch are inverted by a "debouncing circuit" consisting of the two B6 inverters. The debouncing circuit eliminates undesired impulses created by the chattering of the coin switch contacts.

The debouncing circuit outputs enter the clear inputs of flip-flops A7. These two flip-flops constitute an anti-cheat device, designed so that incidental or player-induced vibrations that may operate the coin switch trip wire will not produce game credit. In order to get the correct outputs from the A7 flip-flops, the coin switch contacts must mate for at least 128 horizontal sync pulses, or 8.12 ms. Since most incidental or play-induced vibrations produce a coin switch mating of only a few hundred microseconds, the Q outputs of the flip-flops will not go high and no game credit will result.

However, if a coin is deposited, both A7 flip-flops are enabled, and when both of the Q outputs are high, pin 3 of AND gate A6 will also go high. This produces a low at pin 10 of inverter B6, clearing the second B7 flip-flop.

The same signal which cleared the B7 flip-flops ($\overline{\text{COIN}}$) also drags the collector of transistor Q8 low and turns on the electronic latch (see Paragraph 2.4 in this manual), enabling the attract flip-flop C7 at pin 4.

Since the credit lamp must be lighted to enable gate C6, and since C6 enables the start flip-flop C7, the game cannot be started unless the credit lamp is lighted.

When the start switch is operated, pin 12 of AND gate A6 is pulled high by its 1K pull-up resistor. Since the attract line (A6 pin 13) is already high, pin 11 of A6 will go high. This produces a high at the D input of start flip-flop C7 at pin 12. Since the clock input of this flip-flop is connected to vertical sync at 512 vertical (J2 pin 9), the high at the D input will be clocked out 512V later and this is the start signal.

Meanwhile, $\overline{\text{START}}$ goes low and clears C7 at pin 1. This produces a low at the attract flip-flop output; it returns to shut off gate A6 at pin 13, thereby starting the game and locking out the start switch so the player cannot reset the computer during play and gain additional time.

The $\overline{\text{COIN}}$ signal also sets the cross-coupled flip-flop A1-10, enabling the extended play (only one extended play granted per coin). The player's score 1C-1G are applied to a 1-of-10 decoder, and the high score output is selected by the DIP switch. If the player reaches the selected score, $\overline{\text{EXT PLAY}}$ goes low, setting B7 pin 13. Further, the $\overline{\text{EXT PLAY}}$ signal sets the extended play latch.

The credit light is enabled by the first coin, termed CR. When extended play is reached, the credit LED is then flashed by the one-second pulse.

CREDIT AND START CIRCUIT TEST POINTS

TP 19: LOGIC PROBE: Low going high when the coin switch is operated.
OSCILLOSCOPE: Same as logic probe.

TP 20: LOGIC PROBE: High before coin switch is operated and high, low and pulsing while switch is held in the operated position.
OSCILLOSCOPE: High before coin switch is operated and high with low-going pulses (frequency: 12.5 ms; duration: 4 ms) while coin switch is held in the operated position.

TP 21: LOGIC PROBE: Low before coin switch is operated and high thereafter until game over.
OSCILLOSCOPE: Same as for logic probe.

TP 22: LOGIC PROBE: Low going high when coin switch is operated.
OSCILLOSCOPE: Same as logic probe.

TP 23: LOGIC PROBE: High going low when the start switch is operated. Stays low during the game.
OSCILLOSCOPE: Same as logic probe.

TP 24: LOGIC PROBE: Low and pulsing.
OSCILLOSCOPE: Frequency: 16.66 ms; duration: 0.28 ms.

TP 25: LOGIC PROBE: High with a low going pulse when the start switch is operated.
OSCILLOSCOPE: Same as logic probe, except note that the low-going pulse is about 15 ms.

TP 26: LOGIC PROBE: High during attract mode and low during game mode.
OSCILLOSCOPE: Same as logic probe.

TP 27: LOGIC PROBE: Low when player score matches extended play score.

TP 28: LOGIC PROBE: Low when no credit. High when credit, but not in extended play. Flashing when extended play score is reached.

2.6 SYNCHRONIZATION AND BLANKING

A complex system of synchronization is required so the video signals generated by the PCB computer modulate the electron beam when the beam is in the correct part of the CRT. The essence of synchronization is timing. When sync is malfunctioning, the images appear to shift and move about the CRT because they are displayed in a different place each frame.

The PCB signals must synchronize with the electron beam horizontally so that the information on each line is displayed in the proper sequence (and also vertically so that the vertical positioning of the images is correct).

The sync pulses "tell" the electron beam when to start and stop its sweep, but do not otherwise control the raster. The sync circuit signals are also used in many other places in the PCB to time other operations with the TV monitor.

The basic timing for the horizontal sync circuit is the clock frequency. Vertical sync, however, runs off of horizontal sync. The horizontal and vertical sync counters count down the clock pulses to form timed pulse trains (see Figure 2-5).

The electron beam begins its sweep when horizontal sync goes low; this occurs after 902 clock pulses are counted out by the horizontal sync counters. The rising edge of the next H SYNC pulse occurs when the electron beam reaches the right-hand side of the CRT, and the beam is reset back to the left-hand side by the monitor.

H RESET resets the sync counters after 451 clock pulses or counts. This is the end of the half line segment, so the counters must be started again. Horizontal blanking (H BLANK) is initiated by H RESET and lasts for 32 clock pulses. During the H BLANK time following H SYNC (every other H BLANK), information to be displayed in the next line is loaded into many parts of the PCB. The final horizontal sync signal (H SYNC) is composed of both H RESET and H BLANK and tells the electron beam when to start and stop its sweep.

Vertical reset serves the same purpose as H RESET, except it occurs after 521 horizontal blanking pulses (or half lines) when the electron beam is in the lower right-hand corner of the CRT. The V BLANK signal turns off the video during vertical retrace of the monitor. The vertical sync signal serves the same purpose as H SYNC, except it is timed to the vertical operation of the monitor.

The sync signals are generated in the following manner: the clock starts L2 counting, and when L2 reaches TC (terminal count), TC goes high and stays high for one clock pulse. Since TC of L2 is connected to CEP (count enable parallel) of K2, when TC of L2 goes high, K2 is advanced by one count by the clock pulse at pin 2. K2 then counts 15 clock pulses; then TC of K2 goes high (after a total of 255 clock pulses). The falling edge of the 256th clock pulse causes K1 pin 3 to go high, and it will stay high until the 451st clock pulse when it is reset by $\overline{\text{H RESET}}$. This 256H is divided again at K1 pin 5, producing the 512th clock pulse or count. This is the line that divides the CRT in half.

H RESET is an output of H1, and it is created by the addition of 256H, 128H, 64H and 2H. The result at J1 pin 8 is a pulse 450 clock pulses from the last H RESET pulse. This is clocked through H1 by CLOCK, producing the H RESET signal.

Horizontal blanking is generated by H RESET, which presets the RS flip-flop composed of the F1 gates. This causes H BLANK to go high: 32 clock pulses later it resets the RS flip-flop, producing a blanking pulse 32 clock pulses wide after the H RESET pulse.

Horizontal blanking is then gated with $\overline{\text{H RESET}}$ and 512H to produce $\overline{\text{H SYNC}}$.

Vertical reset is generated by horizontal blanking which clocks counter F2 at pin 14. The counter divides the clock frequency by 16 ; the output of this counter goes to H2, where it is again divided 16 times. The resulting signal is finally divided another four times by counter J2. J2 is allowed to divide only to four (a count of 512) because on the

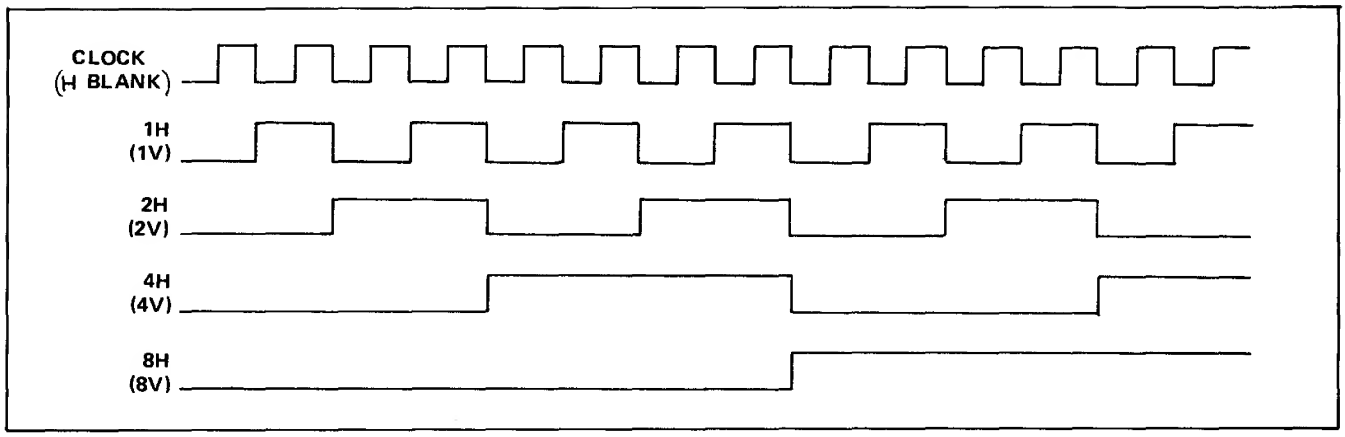

Figure 2-5 Sync Pulse Trains

521st count (512 plus 8V plus one more H RESET pulse) all the counters are reset by V RESET.

Vertical sync is created by the RS flip-flop F1, which is preset by V RESET and reset by 8V. This produces a high sync pulse which is four lines wide.

Because there are an odd number of half-lines being counted out, the electron beam must start at the center of the top of the screen every other field to achieve vertical reset. This is why the first line of the even field begins in the center of the CRT.

SYNCHRONIZATION AND BLANKING TEST POINTS

TP 29[a]: VIDEO PROBE: A number of thin vertical white lines.
LOGIC PROBE: Low and pulsing.
OSCILLOSCOPE: Frequency: 1.12 μs; duration: 0.07 ms.

TP 29[b]: VIDEO PROBE: Two vertical white banks.
LOGIC PROBE: Low and pulsing.
OSCILLOSCOPE: Frequency: 32 μs; duration: 1.3 μs.

TP 29[c]: VIDEO PROBE: Alternating black and white bands.
LOGIC PROBE: High, low and pulsing.
OSCILLOSCOPE: Frequency: 32 μs; duration: 14 μs.

TP 30: VIDEO PROBE: Left half of CRT black; right half white.
LOGIC PROBE: High, low and pulsing.
Frequency: 64 μs; duration: 28 μs.

TP 31: VIDEO PROBE: One thin vertical black line in center of CRT.
LOGIC PROBE: High and pulsing.
OSCILLOSCOPE: Frequency: 32 μs, duration: 0.1 μs.

TP 32: VIDEO PROBE: Thin vertical white line in center of CRT.
LOGIC PROBE: Low and pulsing.
OSCILLOSCOPE: Frequency: 32 μs; duration: 0.1 μs.

TP 33: VIDEO PROBE: White vertical band in center of CRT.
LOGIC PROBE: Low and pulsing.
OSCILLOSCOPE: Frequency: 32 μs; duration 2.3 μs.

TP 34: LOGIC PROBE: High and pulsing.
OSCILLOSCOPE: Frequency: 63.5 μs; duration 2.3 μs.

TP 35: VIDEO PROBE: Starting with 2V, touch probe to all outputs up to 512V. Notice that the horizontal black and white bars double in width at each successive division.

TP 36: LOGIC PROBE: Low and pulsing.
OSCILLOSCOPE: Frequency: 16.66 ms; duration: 20 μs.

TP 37: LOGIC PROBE: Low and pulsing.
OSCILLOSCOPE: Frequency: 16.66 ms; duration: 30 μs.

TP 38: LOGIC PROBE: Low and pulsing.
OSCILLOSCOPE: Frequency: 16.66 ms, duration: 254 μs.

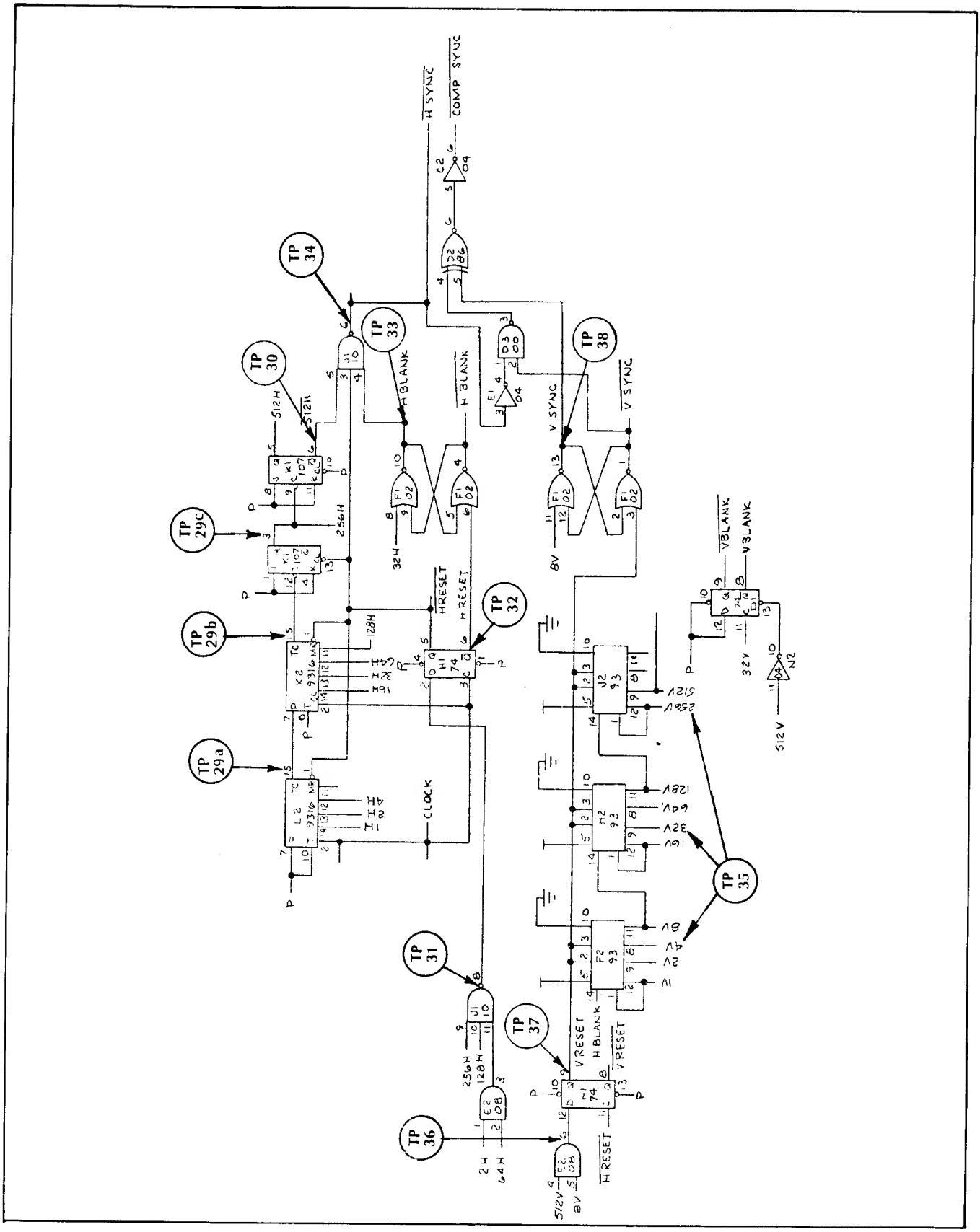

Figure 2-6 Synchronization and Blanking

2.7 SOUND CIRCUITRY

The noise generator uses a 16-stage pseudorandom number generator. This number of stages gives a nonrepetitive count of 65,535 states, which very closely approximates white noise. One troublesome feature with this type of counter is that there is always one lock-up state in which the counter would stop. To prevent this from occurring, an inverter is placed in one of the feedback branches, so that the clear input on the shift registers will set the counter to an active state. When the clear is released, the counter starts from that state and generates its pseudorandom pattern. This part of the sound system is the heart of the screech and crash sounds.

2.7.1 Screech Sound:

This sound is generated using a frequency-modulated oscillator. A 555 timer is used in the astable mode with the center frequency of ground 850 Hz. The output of the noise generator is fed into the FM input (pin 5) with the proper amplitude to simulate a screech sound.

The screech logic circuit generates the SCREECH signal, which creates the "screech" sound by enabling the noise and screech sound generator.

$\overline{\text{ATTRACT}}$ must be high (a game started) to enable the screech circuit. If $\overline{\text{SKID}}$ (the "brakes applied" signal) goes low presetting flip-flop C1, the $\overline{\text{SCREECH}}$ signal will go high. When $\overline{\text{SKID}}$ returns high, 1024V will be clocked through two frames later turning the SCREECH signal off.

SCREECH LOGIC TEST POINTS

TP 39: LOGIC PROBE: High until brake switch is closed, then drops low.
OSCILLOSCOPE: Same as logic probe.

TP 40: LOGIC PROBE: Low going high when brake switch is closed.
Same as logic probe.

2.7.2 Crash Sound:

To generate the crash sound, the output of the noise generator is modulated by a voltage-controlled amplifier. The VCA used is a MFC6040 (or MC3340) which generates an envelope amplitude proportional to the voltage applied to the control pin. When a crash occurs, the voltage on the control goes toward ground very rapidly, turning on the VCA. When the crash signal is removed, the voltage on the control pin is allowed to come back up. This is caused by current from the control input flowing into a capacitor. The capacitor prevents the voltage from building up at once, at a rate set by the time constant of the circuit. This gives a decaying envelope to the sound which simulates a crash. The VCA also has a .01 μf capacitor on the rolloff terminal to filter out some of the high frequency components of the sound.

2.7.3 Engine Sound:

This circuit creates the sounds of the car engine, both when it is idling and moving. This is accomplished with three function generators and one electronic attentuator.

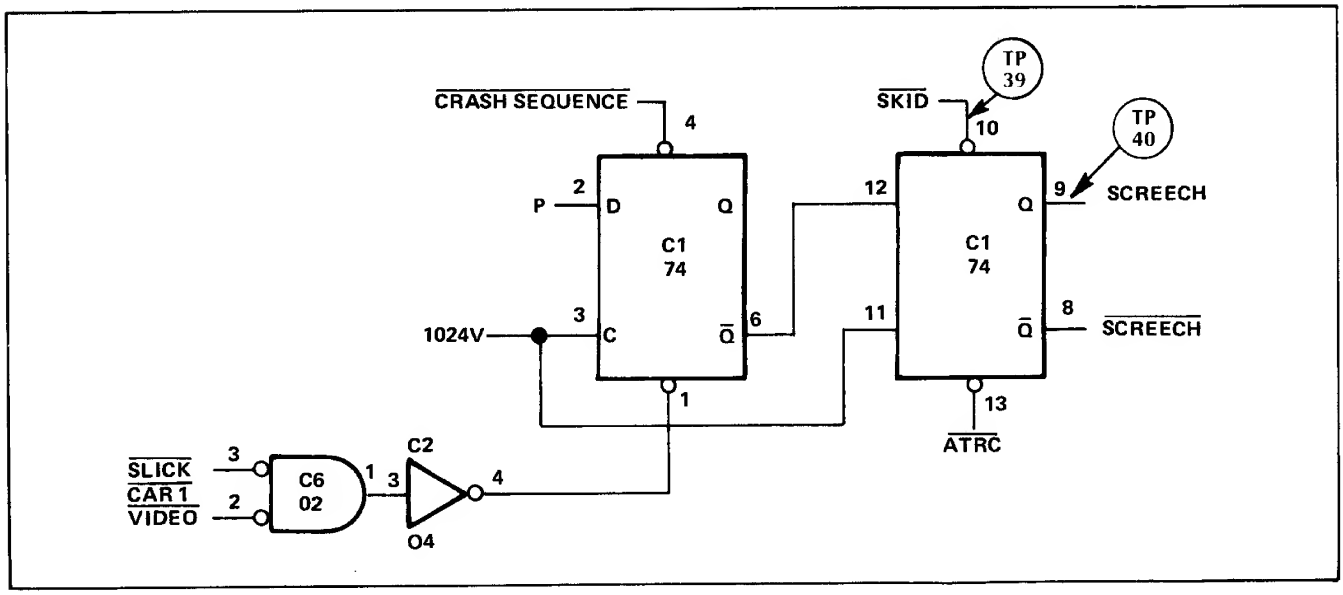

Figure 2-7 Screech Logic

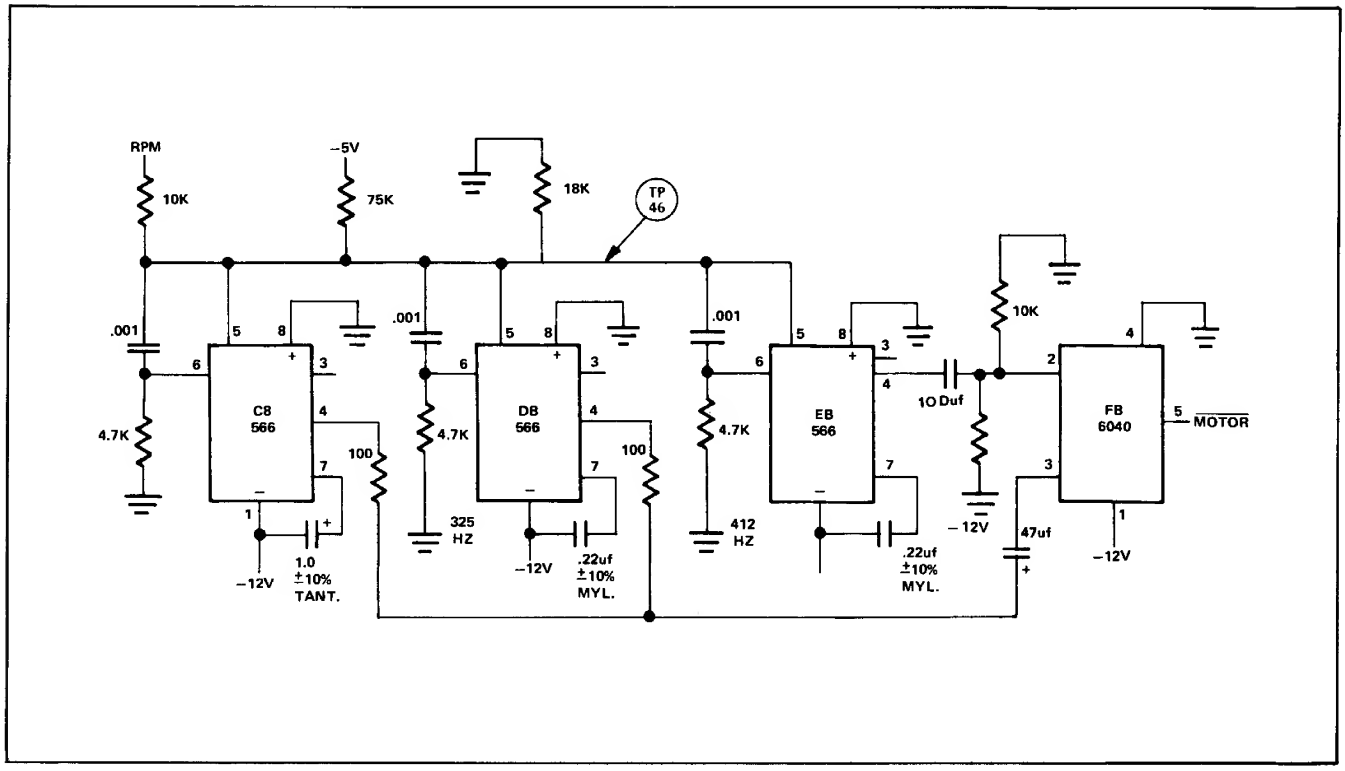

Figure 2-8 Engine Sound Logic

Closing the gas pedal switch drops the RPM signal voltage from 0 volts to about −3 volts, causing the function generators to modulate the frequencies of their signals.

The sound signals from C8 and D8 are the inputs to the attenuator (F8), and the signal from #8 modulates the amplitude of the attenuator output. The resulting sound signal is carried to the audio amplifier and then to the speaker.

ENGINE SOUND GENERATOR TEST POINTS

TP 46: OSCILLOSCOPE: Closing the gas pedal (1st gear) switch causes the attenuated R.P.M. signal voltage to drop from 0 to −2.5 volts.

2.8 AUDIO AMPLIFIER

An audio amplifier is necessary to drive the speaker. The sound signals enter the amp circuit through R16 and C8. The resistance of R4 determines the gain or volume and is adjusted by turning the small blue trim pot (marked "VOL") found near the LM380. The LM380 amplifies the sound signal to a level high enough to drive the speaker. Pin #1 is used to turn off the sound in the attract mode. When this pin is pulled low, the amplifier is disabled.

THE AUDIO AMPLIFIER TEST

TP 50: Turn the volume down, attach the clip end of a video probe to capacitor C8 and run the prod down the vertical sync counter outputs. You will hear a series of tones from counter H2 pins 12, 9, 8 and 11.

2.9 DYNAMICS AND SPEED CONTROL

An analog computation circuit is used to take the gas and brake pedal inputs and convert them to the appropriate RPM and speed voltages used, respectively, in the motor sound circuit and the speed pulse oscillator.

2.9.1 Gas (Speed) Circuit:

Figure 2-10 is a simplified drawing of the RPM and speed amplifiers.

When the gas pedal is depressed, the input to the RPM amp rises to 2.5 volts (5 volts for 4th gear). This is amplified and inverted by the RPM amp; an input from the acceleration circuit prevents the output from going negative instantaneously as

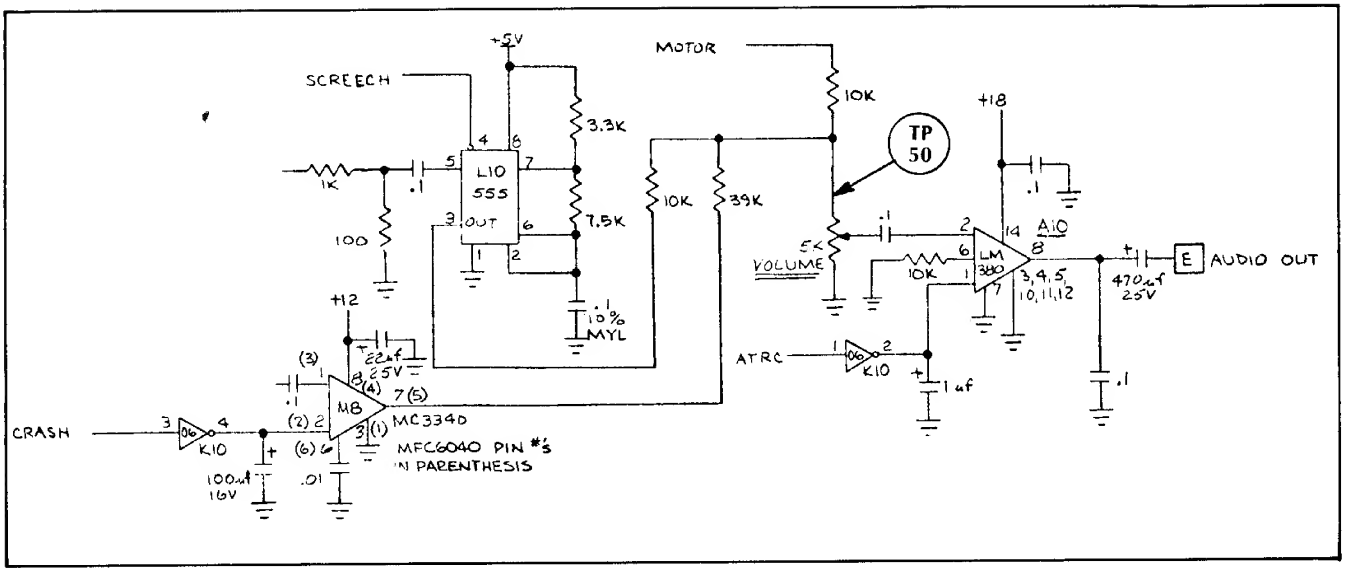

Figure 2-9 Audio Amplifier

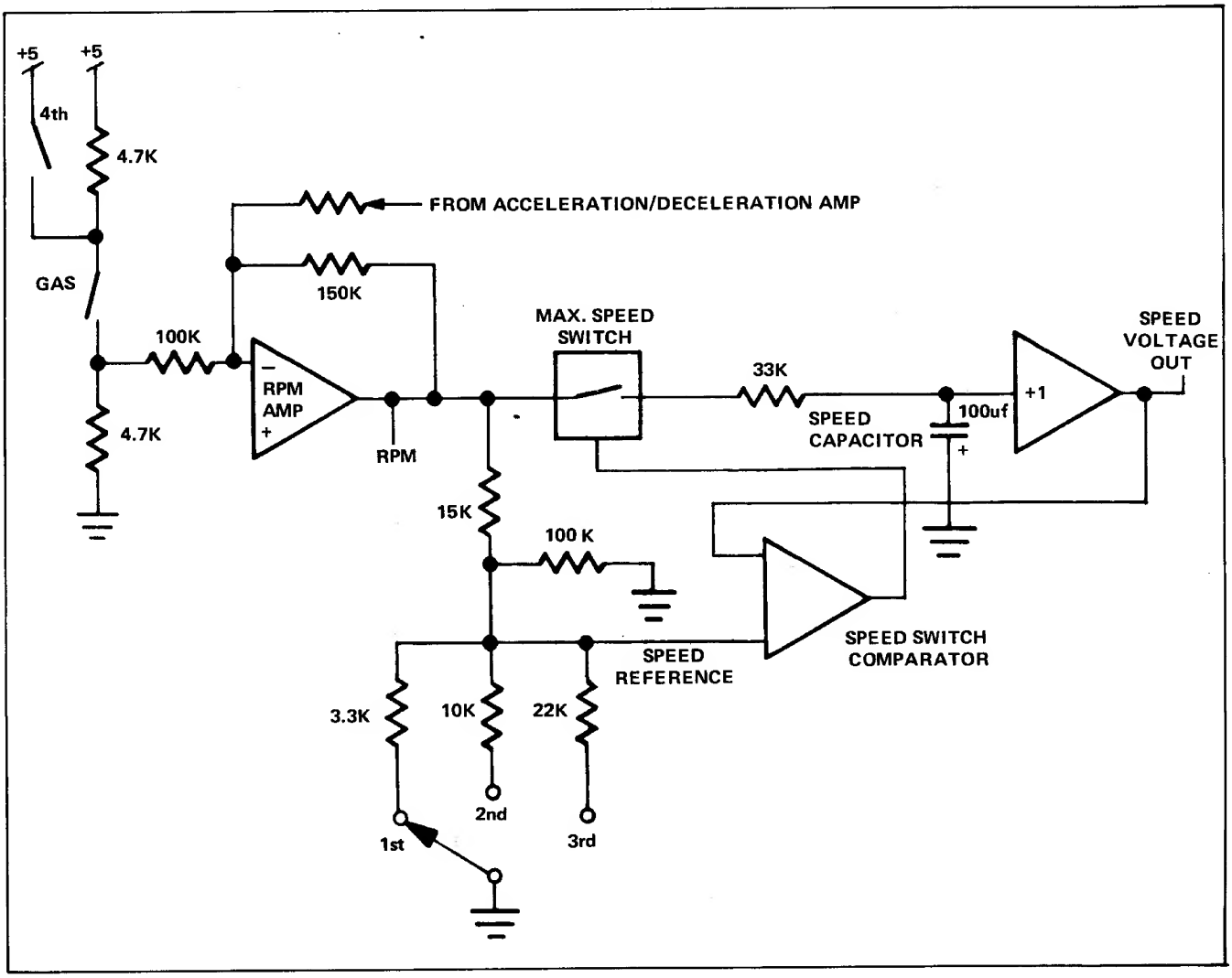

Figure 2-10 RPM and Speed Amplifiers

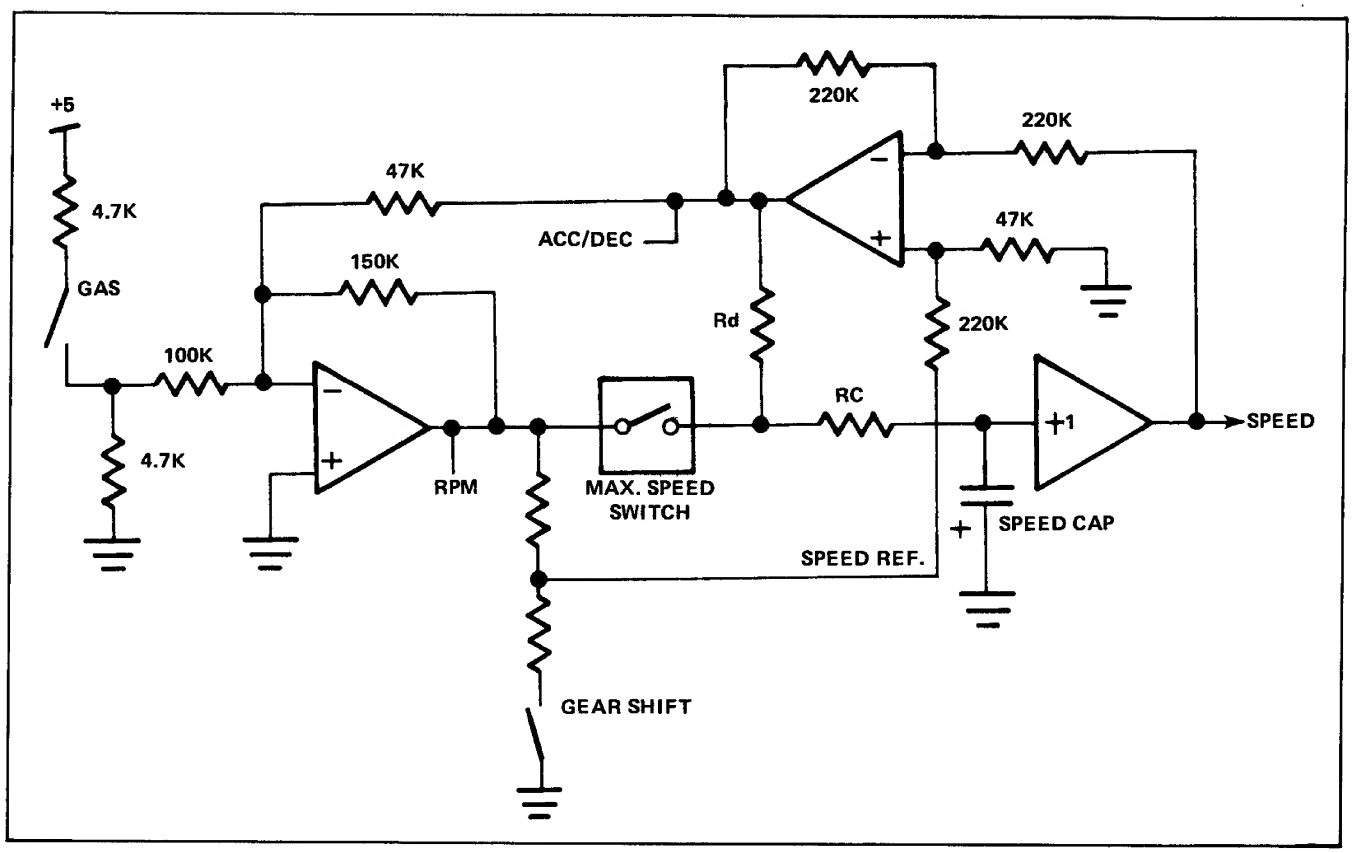

Figure 2-11 Acceleration/Deceleration Circuit

explained later. When the RPM voltage goes negative, the 100 μf speed capacitor starts to charge in the negative direction. The capacitor voltage is buffered by the speed amp to provide the speed voltage out to the oscillator.

A speed reference signal is determined by the RPM voltage and the gear shift position. When the speed voltage reaches the speed reference, the speed switch comparator opens the max speed switch preventing the speed capacitor from charging further. The actual gear resistors are switched in remotely by analog switches.

The ACC/DEC circuit is shown in Fig. 2-11 above. When the gas pedal is pressed, the RPM voltage is coupled through the speed switch to the capacitor that begins to charge. The RPM voltage and the gear shift establish the speed ref voltage. The difference between the speed ref and speed voltages is obtained by the ACC/DEC amplifier. This difference is then fed back to the RPM amplifier to effectively limit the rate of RPM increase. When the car is at rest or at a constant velocity such as maximum speed in 1st, 2nd, or 3rd gear, the output of the ACC/DEC amp is zero and has no influence on the speed/RPM circuit.

If the car is in motion and the gas is let up, then the speed reference signal immediately goes more positive than the speed voltage, causing the maximum speed switch to open and the ACC/DEC amplifier output to go positive. This positive voltage is fed into the RPM amp to keep the RPMs "up." The positive voltage also causes current to flow through R_d and R_c to charge the capacitor towards ground, thus reducing the speed (compression).

If an upshift or downshift is made while the car is in motion, the speed ref voltage will change instantly and cause the ACC/DEC voltage to go negative or positive, respectively. This, in turn, causes the RPM voltage to decrease or increase depending on the direction of the shift.

As an additional note, the speed switch comparator causes the maximum speed switch to be closed during acceleration, open during deceleration, and partially closed or slightly oscillating for constant speed.

(a) RPM AMP Input/Output Conditions: The junction of the 4.7K and 100K resistors at the RPM AMP input is connected to the gas pedal switch that

controls the acceleration of the car. When the car is stationary or in gear with no gas, this point will be zero volts. When you step on the gas, this will increase to approximately 2.5 volts in first, second, and third gears and rise to +5 volts in 4th.

The RPM output (TP 59) is at 0 volts when the gas switch is open, and drops to about −3.6 volts when you step on the gas in first. When you shift into second, pin 3 rises to approximately −2 volts and then drops to about −3.8 volts as the car picks up speed. The same occurs on a shift from 2nd to 3rd. When you shift into 4th, it rises to −2 volts again and drops down to about −4.4 volts when the car reaches maximum speed.

(b) Speed AMP Voltages: The output of the speed amp is the analog of the car speed. This voltage starts at 0 volts and drops to −0.65 volts at top speed in first gear. When you shift into second, it drops to about −1.3 volts as the car picks up speed. When you shift into third, it drops to −2 volts and then drops down to about −3.5 volts when the car reaches maximum speed in 4th gear.

2.9.2 Brake Circuit:

Fig. 2-12 is a simplified drawing of the brake circuit.

When the brake is pressed, the PNP transistor is switched on, causing current to flow through R_b to charge the speed cap towards 0 volts. The discharge current is sensed by the skid amplifier—whose output goes low upon braking. When the capacitor has charged to a point near zero, but the car is still slightly moving, the I_{brake} current no longer causes sufficient voltage drop across R_b to overcome the slight bias introduced by R_H and the 1 Meg resistor. The $\overline{SKID}$ signal goes high, thus removing the SKID condition.

When SPEED KILL goes high,the speed cap is charged to 0 volts immediately to kill the car speed. The limiter amplifier and diode prevents the voltage on the speed capacitor from going positive.

2.9.3 Speed Oscillator:

The speed oscillator is shown in Fig. 2-13. Assume that the timing capacitor has been charged through the diode and is now discharging through R_t. When V_{cap} reaches a voltage equal to V_{in}, Comp. B goes low to switch the flip-flop composed of cross-coupled gates. This in turn causes C_t to recharge to a negative voltage through the diode. When V_{cap} reaches V_{ref}, Comp. A goes low, resetting the flip-flop to allow C_t to again charge towards 0 volts.

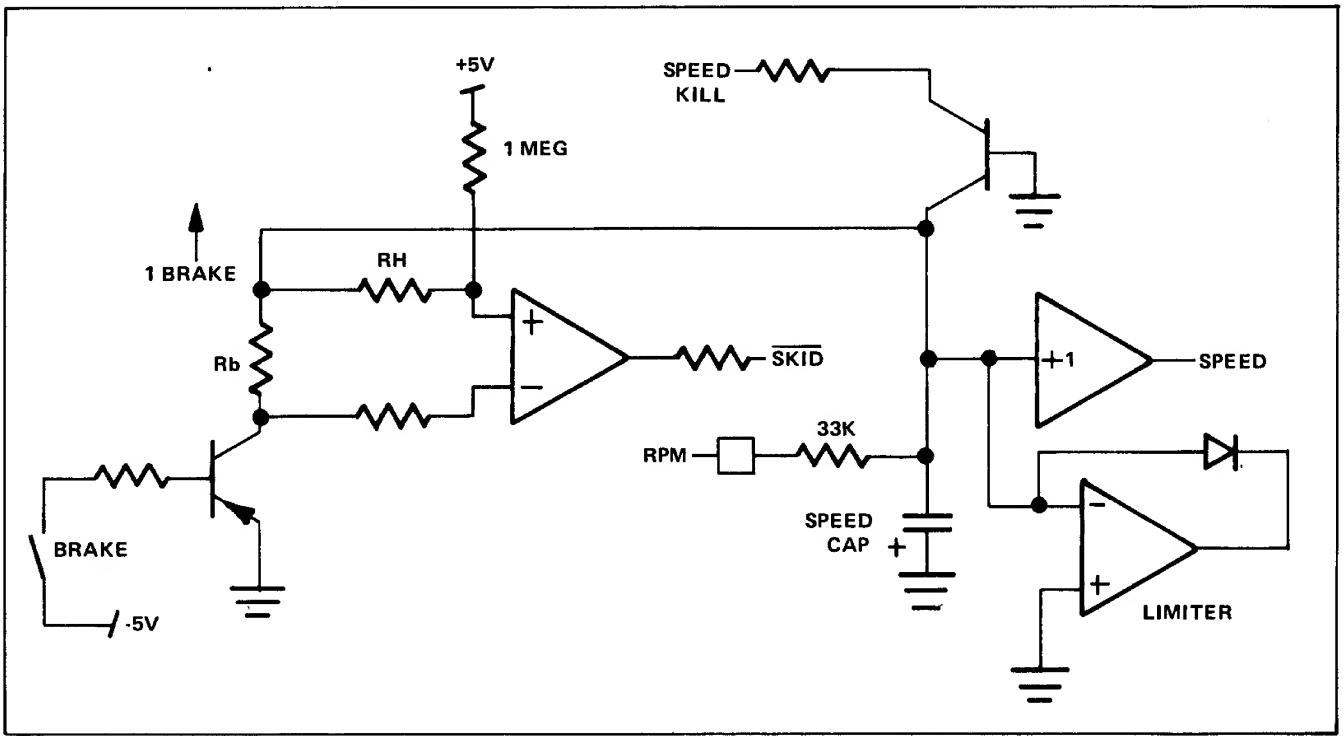

Figure 2-12 Brake Circuit

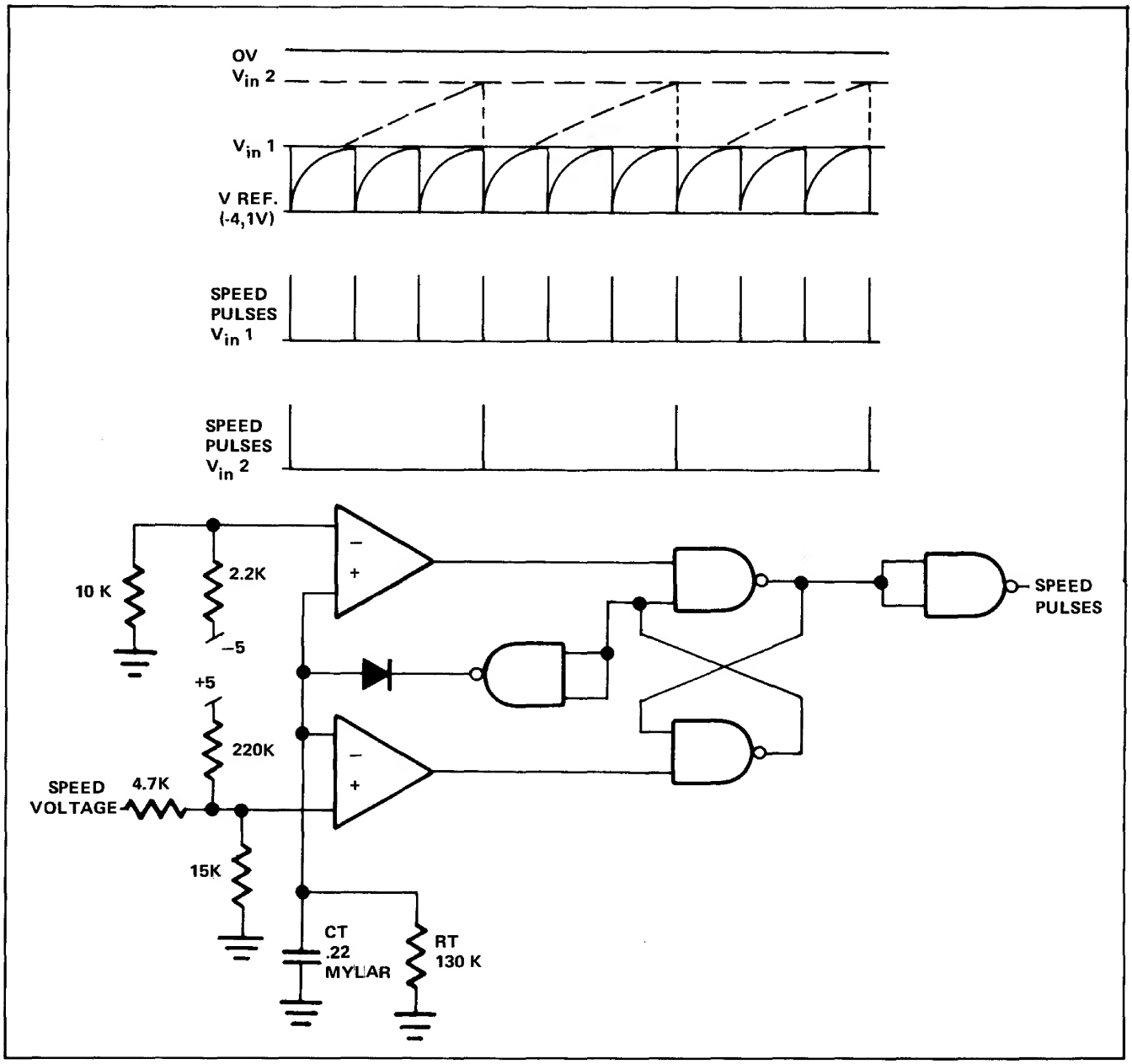

Figure 2-13 Speed Oscillator and Waveforms

When V_{in} is just slightly positive with respect to V_{ref}, C_t only discharges for a short period before it is again charged and the oscillator frequency is high. When V_{in} is just slightly negative, C_t must charge exponentially toward 0 volts until $V_t = V_{in}$ and the frequency is low (see Fig 2-13). When $V_{in} \geq 0$, the oscillator is stopped.

SPEED CONTROL TEST POINTS

NOTE

The easiest way to check many of these test points is with a digital voltmeter (DVM); however, the oscilloscope will yield accurate results also. In a pinch, use a VTVM.

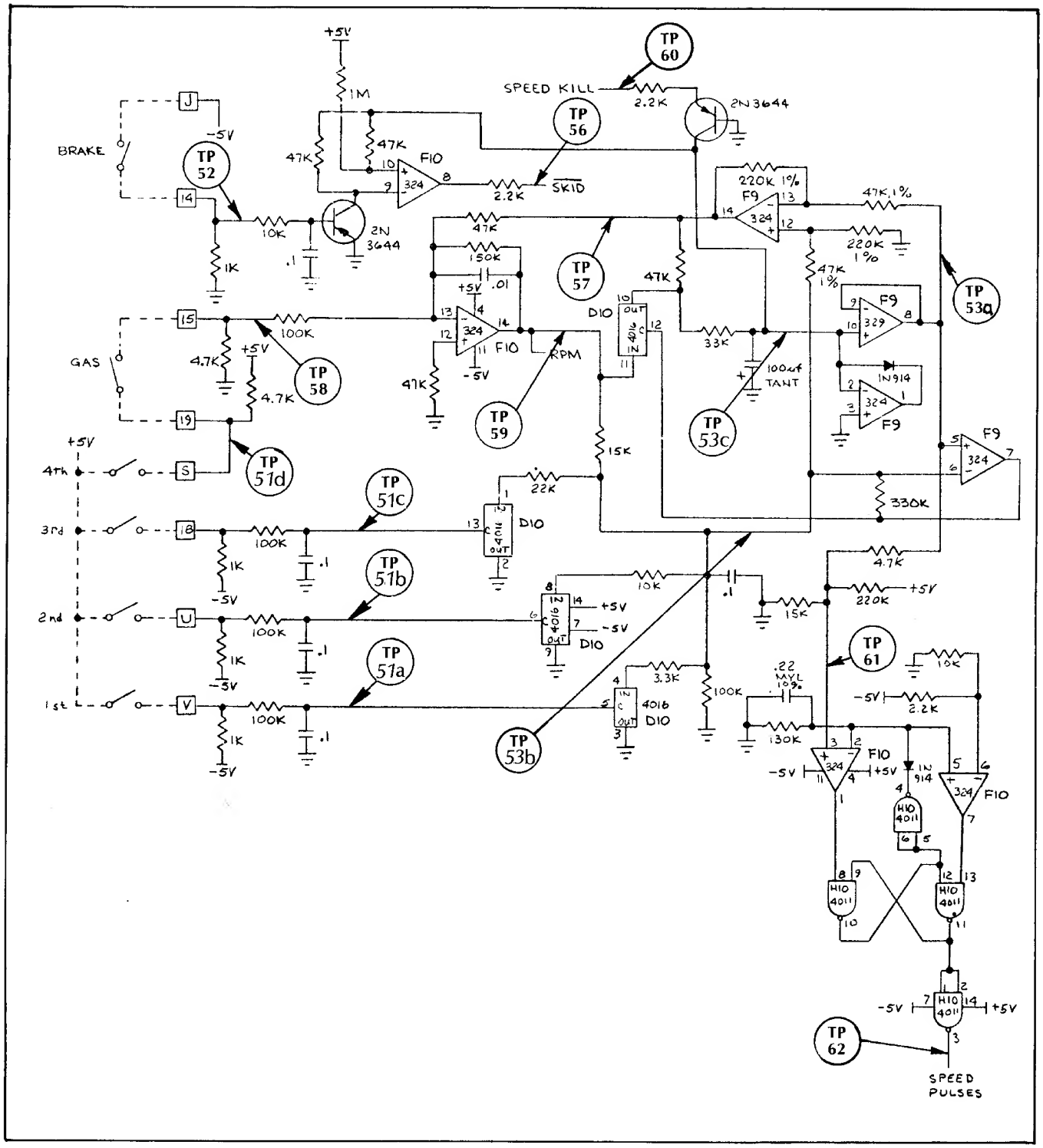

Figure 2-14 Speed Control

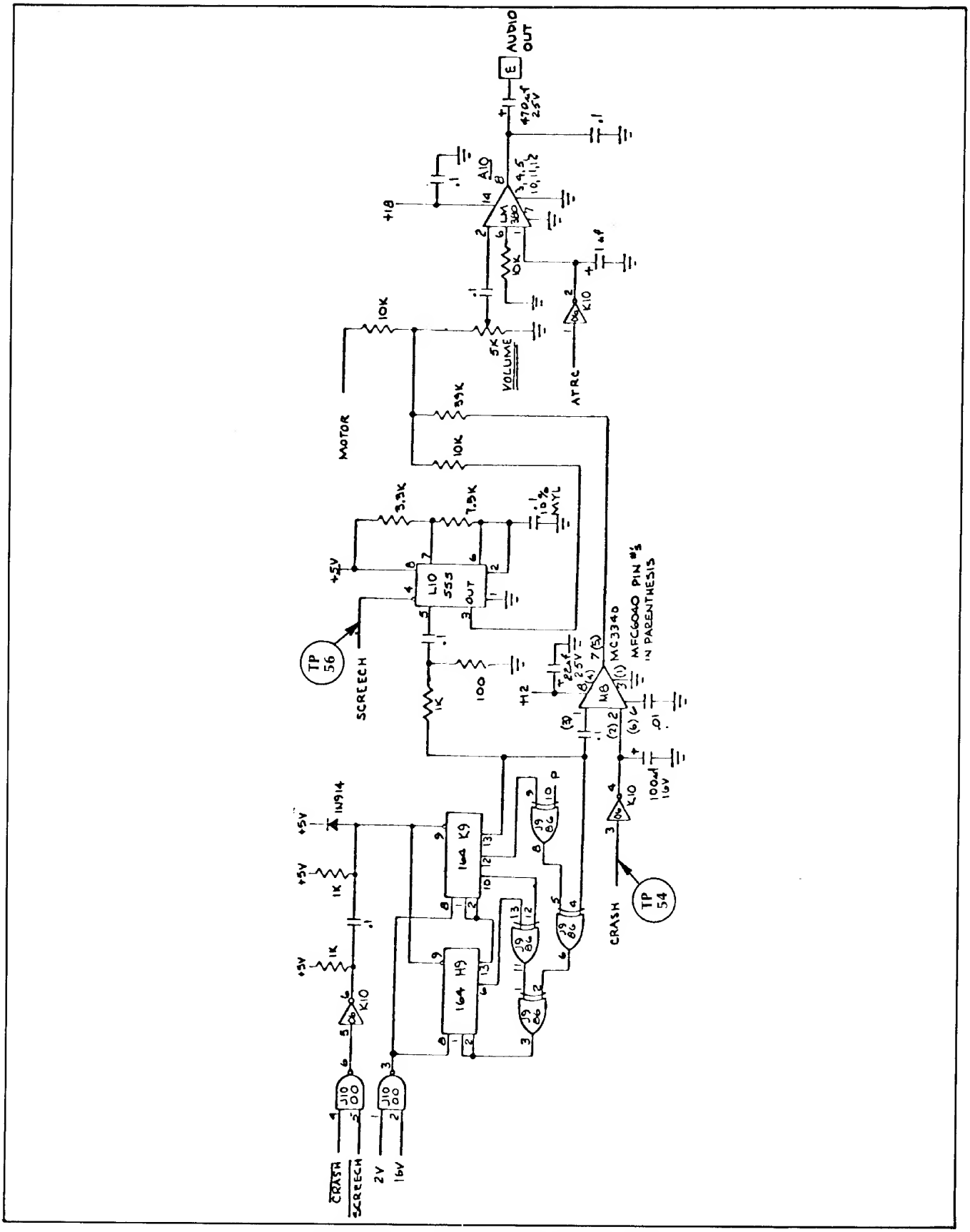

Figure 2-14 Speed Control Audio Refile

TP 51: LOGIC PROBE: Low going high as each shift is closed.
OSCILLOSCOPE: Same as logic probe.

TP 52: OSCILLOSCOPE: 0 volts, dropping to −5 volts when the brake switch is closed.
DVM/VTVM: Same as oscilloscope.

TP 53a:
TP 53b: (Note: voltages below refer to all three test points.)
TP 53c:

Check voltage drop with the oscilloscope or voltmeter as you reach top speed in each gear.
1st gear .....−0.65 volts
2nd gear .....−1.3 volts
3rd gear .....−2.0 volts
4th gear .....−3.5 volts

TP 54: LOGIC PROBE: Low, going high when a crash occurs.
OSCILLOSCOPE: 0 volts, rising to 3.5 volts at crash.
DVM/VTVM: Same as oscilloscope.

TP 56: LOGIC PROBE: High, going low when brake switch is closed (car in motion).
OSCILLOSCOPE: Same as logic probe.

TP 57: OSCILLOSCOPE: 0 volts when car is at rest or constant speed. *−0.8* volts when acceleration starts and *+0.8* volts when deceleration starts (gears 1-3 only).

TP 58: Check with oscilloscope or voltmeter. Voltage should increase from 0 volts to the indicated values as the gas pedal is depressed.
1st gear .....+2.5 volts
2nd gear .....+2.5 volts
3rd gear .....+2.5 volts
4th gear .....+4.3 volts

TP 59: Check with oscilloscope or voltmeter. Voltage should drop from 0 to the indicated values as you reach top speed in each gear.
1st gear .....−3.6 volts
2nd gear .....−3.7 volts
3rd gear .....−3.8 volts
4th gear .....−4.3 volts

TP 60: LOGIC PROBE: Low when car is at rest; high when car crashes or when game is in attract mode.
OSCILLOSCOPE: Same as logic probe.

NOTE

Speed oscillator input/output conditions: As speed voltage into the oscillator input (TP 61) drops lower and lower, the speed pulses from the 4011 output buffer (TP 62) increase in frequency.

TP 61: Check with oscilloscope or voltmeter. Voltages should drop from 0 volts to indicated values as you reach top speed in each gear.
1st gear .....−0.4 volts
2nd gear .....−0.9 volts
3rd gear .....−1.4 volts
4th gear .....−2.6 volts
Car at rest in any gear .....+.08 volts

TP 62: LOGIC PROBE: Low when car at rest; low and pulsing when car is moving.
OSCILLOSCOPE: Following readings are to be taken with car at top speed in each gear.
1st gear .....65 ms between pulses
2nd gear .....45 ms between pulses
3rd gear .....30 ms between pulses
4th gear .....15 ms between pulses

2.10 VLd1 SIGNAL

VLd1 ("vertical load one") is used to address the ready-only memory (ROM) for the vertical positioning of the car image.

$\overline{\text{V RESET}}$ clocks the low from B1 pin 12 out the Q output; this low waits at B1 pin 2 until it is clocked through by $\overline{\text{H SYNC}}$. The Q output (B1 pin 5) presets B1 pin 10, causing a high to appear at B1 pin 9. This high is clocked through B1 pin 5 on the next $\overline{\text{H SYNC}}$ pulse. The result is a VLd1 pulse which occurs once per field and is one H SYNC pulse wide.

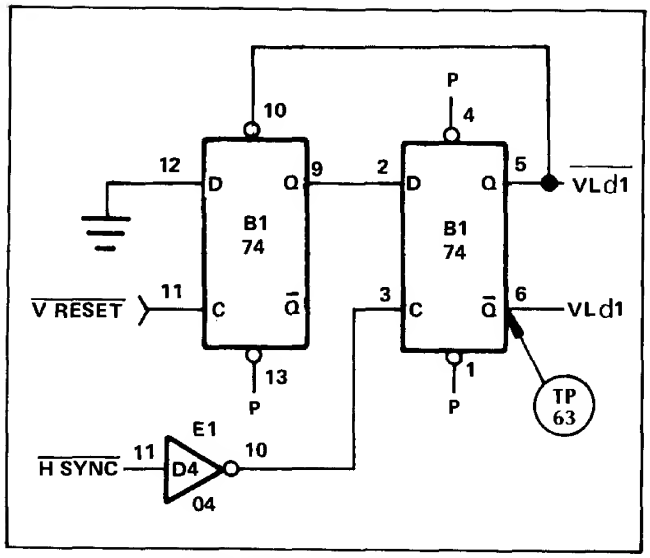

Figure 2-15 VLd1 Circuit

VLd1 TEST POINTS

TP 63: LOGIC PROBE: Low and pulsing.
OSCILLOSCOPE: Frequency: 16.66 μs; duration 63.5 μs.

2.11 1 STOP SIGNAL

This signal is a ROM address that determines the speed with which the car image is moved.

The input to this circuit is SPEED PULSE from pin 1 of the 8098 in the speed control circuit. As the car picks up speed, the speed pulses increase in frequency.

When the car is stationary, $\overline{1\ STOP}$ is low. As the car starts moving, $\overline{1\ STOP}$ begins pulsing high and the pulses get closer together and longer in duration until the car reaches top speed in fourth gear, at which time the signal stays high (see Figure 2-16).

TP 64: LOGIC PROBE: Low when car at rest. Low and pulsing when car is accelerating. High when car reaches top speed in 4th gear (provided speed pot is adjusted correctly).
OSCILLOSCOPE: See waveform illustrated above.

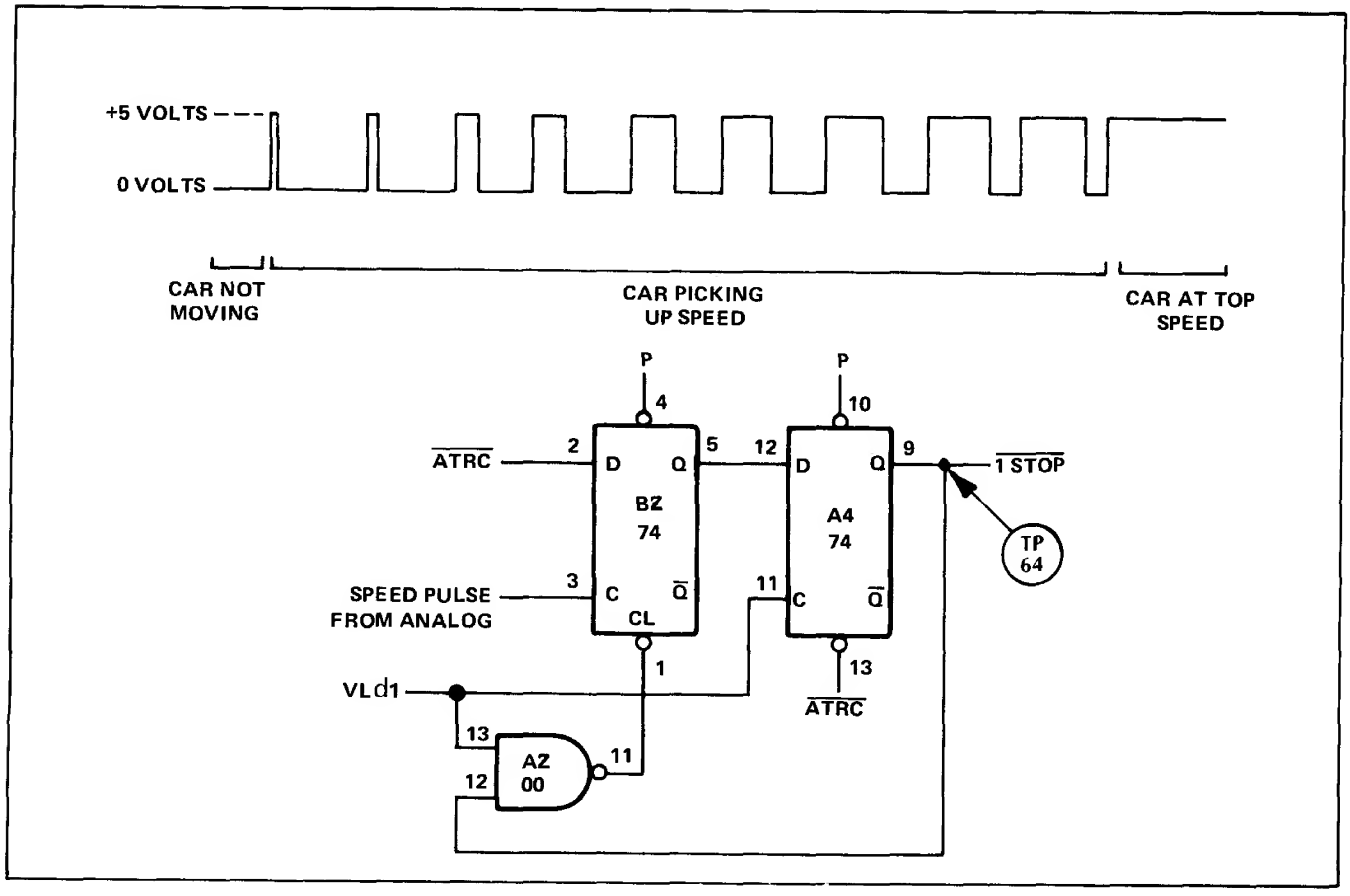

Figure 2-16 $\overline{1\ STOP}$ Waveform and Circuit

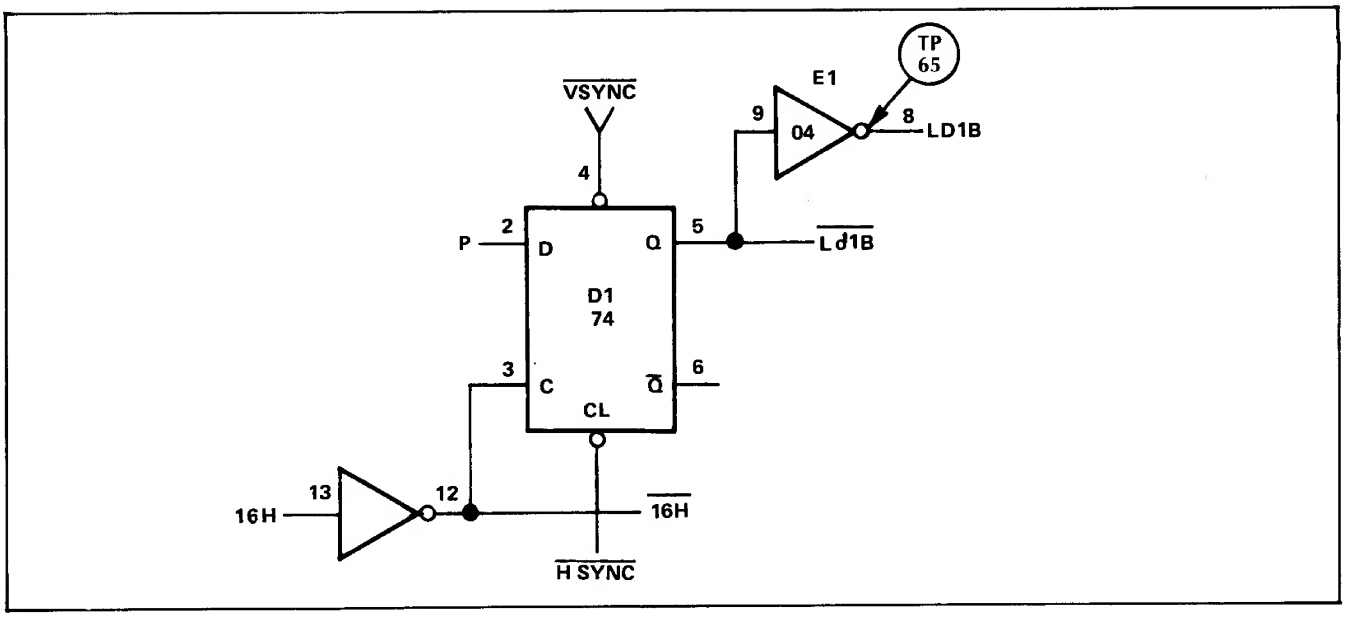

Figure 2-17 Ld1B Circuit

2.12 Ld1B SIGNAL

Ld1B ("load one B") is another ROM address; however, it is also used in several other places to load information into counters, etc.

$\overline{\text{H SYNC}}$ clears flip-flop D1. Sixteen clock pulses later, the high is clocked from the D input out the Q output and is inverted to become Ld1B. $\overline{\text{V SYNC}}$ disables this function once per field, producing a wider Ld1B pulse.

Ld1B TEST POINTS

TP 65: LOGIC PROBE: Low and pulsing.
OSCILLOSCOPE: Frequency: 63.5 μs; duration 5 μs.

2.13 RESET 1 SIGNAL

The function of this signal is to tell the car motion circuits where to reposition the car image at the start of a new game or after the car is driven off the race course.

When CAR 1 VIDEO encounters $\overline{\text{COMP SYNC}}$ (i.e., the car is driven off the screen), A2 pin 6 goes low and causes a low to appear at A6 pin 5. The last low clears flip-flop A4. The flip-flop remains cleared until it receives the next $\overline{\text{VLd1}}$ pulse which clocks the high from A4 pin 2 out A 4 pin 5: this signal is known as $\overline{\text{RESET 1}}$.

$\overline{\text{START}}$ serves a function in the circuit similar to the low from A2 pin 6: it also clears RESET 1.

RESET 1 TEST POINTS

TP 66: LOGIC PROBE: Low pulse when the game starts or the car is driven off the track.
OSCILLOSCOPE: Same as logic probe.

2.14 STEERING CONTROL

The two infrared light-emitting diodes (LEDs) mounted on the steering assembly PCB are aimed directly at the two phototransistors. As the slotted steering ring rotates, the path of light is broken up causing the phototransistors to pulse in a way which corresponds to the direction of the steering wheel rotation. These pulses are fed into four-input Schmitt triggers (J8) which clean up the pulses so the flip-flops can be triggered consistently.

When the steering wheel is turned in a clockwise direction, a rising edge occurs at the clock input of K8 before a rising edge reaches the D input. This causes the CW (clockwise) signal to be high, enabling gate A2 to advance the steering encoder (see next section of this manual); the steering encoder rotates the car in a clockwise direction.

However, if the steering wheel is rotated in a counterclockwise direction, a rising edge will occur at the D input before a rising edge reaches the clock input. This produces a low CW signal.

The RATE signal triggers A4, providing a pulse to decoders A2 and A3. Depending on the direction

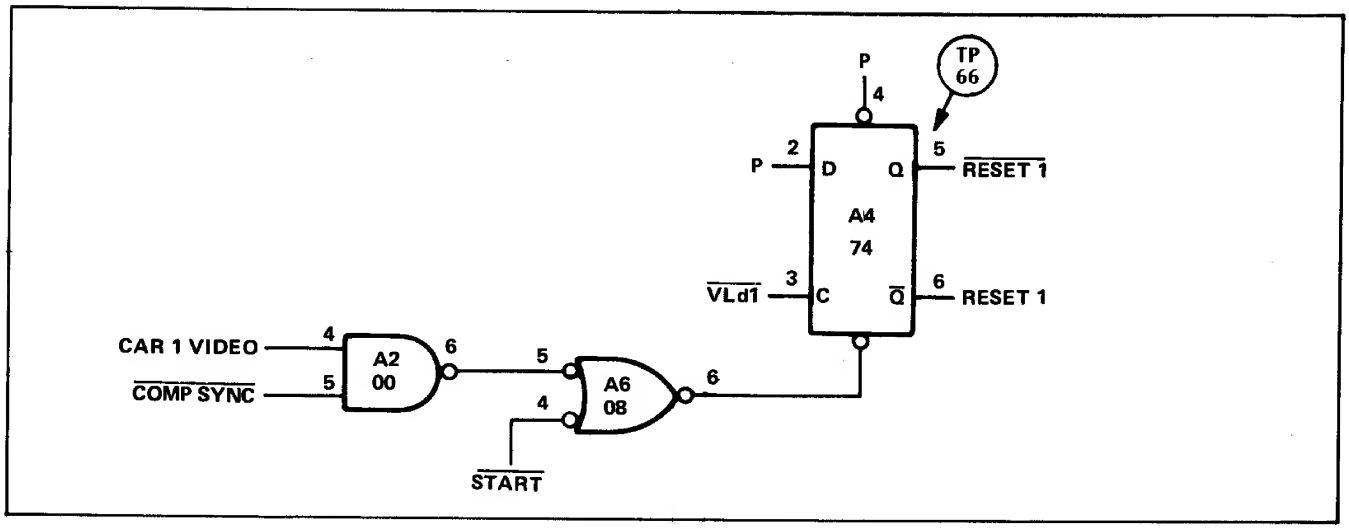

Figure 2-18 RESET 1 Circuit

(CW or CCW), the car image direction counter is incremented or decremented. $\overline{\text{V RESET}}$ resets A4 and sets the maximum turning rate for the car—one step per frame.

During a crash, $\overline{\text{CRASH}}$ A goes low and presets K8, producing a low CW. It also presets A4, producing a high at A4 pin 9; this shuts off gate A3. This allows A3 to pass 128V, decrementing the encoder counters and thereby causing the car image to spin uncontrollably during the crash.

Two LEDs (CR17 and CR18) have been included on the main PCB to facilitate troubleshooting the steering assembly. The pulses from the Schmitt triggers light the LEDs. If the LEDs flicker as you rotate the steering wheel, the steering assembly components are probably alright and the malfunction is most likely located in another part of the steering circuitry. If the LEDs do *not* flicker, look for foreign material between the infrared LEDs and the phototransistors of the steering PCB, physical damage to the steering assembly, broken connections or a malfunctioning Schmitt trigger.

STEERING CONTROL TEST POINTS

TP 67: LOGIC PROBE: High when steering wheel is turned clockwise. Low

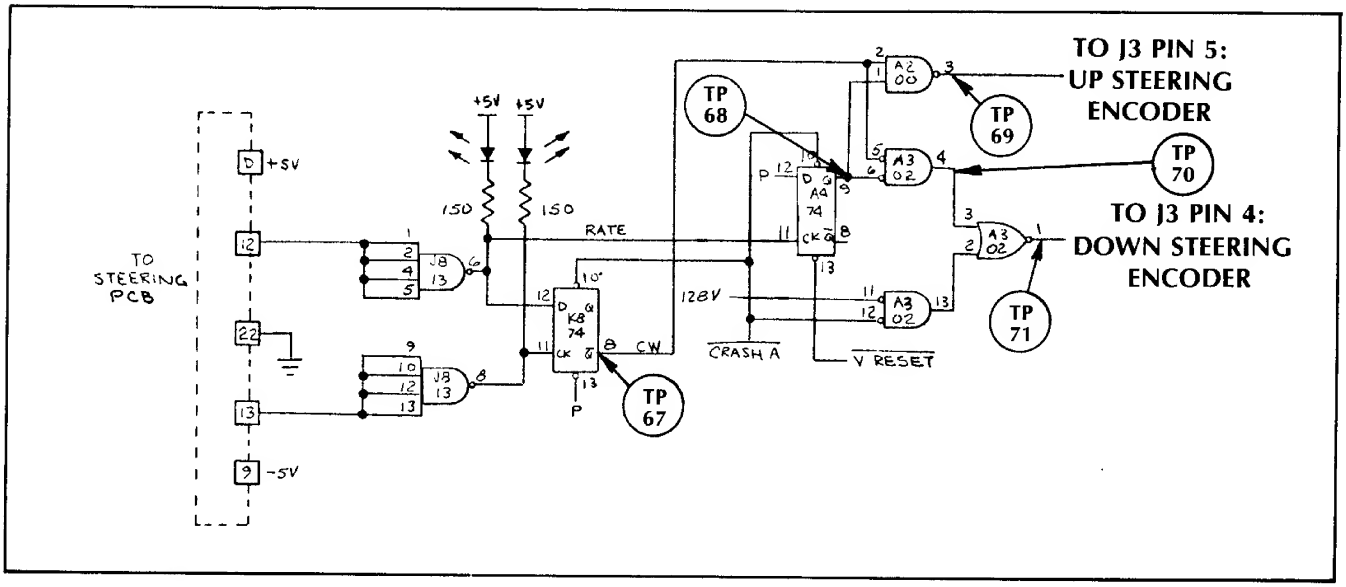

Figure 2-19 Steering Control

when steering wheel is turned counterclockwise.
OSCILLOSCOPE: Same as logic probe.

TP 68: LOGIC PROBE: Pulses when steering wheel is turned, and pulse rate rises as wheel is turned faster.
OSCILLOSCOPE: Same as logic probe.

TP 69: LOGIC PROBE: Pulses when steering wheel is turned clockwise. High when steering wheel is turned counterclockwise.
OSCILLOSCOPE: Same as logic probe.

TP 70: LOGIC PROBE: Pulses when steering wheel is turned counterclockwise. Low when steering wheel is turned clockwise.
OSCILLOSCOPE: Same as logic probe.

TP 71: LOGIC PROBE: Pulses except when steering wheel is turned counterclockwise or when a crash occurs.
OSCILLOSCOPE: Same as logic probe.

2.15 STEERING ENCODER

The steering encoder directs the ROM to read out the different aspects of the car image as the steering wheel is rotated.

The steering control circuit decides whether to pulse the UP ("U" at J3 pin 5) or the DOWN ("D" at J3 pin 4) line of the J3 up/down counter. As the up input is pulsed, a binary code results at output pins 6 and 7 of J3. After 16 pulses into the up input, a "carry" pulse is produced at J3 pin 12. This advances K3, which then produces another binary code at output pins 2, 3 and 6.

However, if the down input to J3 is pulsed, J3 will count down from the last loaded number and, when it reaches 0, a "borrow" pulse is generated at J3 pin 13, decrementing K3.

At the beginning of the game, or if the car is driven off the track, $\overline{\text{RESET}}$ 1 goes low. This resets the counters to zero and re-orients the car image.

L3 is a latch which takes the 1D1, 1D2, 1D3 and 1D4 outputs from the counters and passes these signals on to the ROM multiplexers unless SCREECH is high. A high SCREECH latches up the last information from the counters and holds it until SCREECH goes low again. This causes the car image to continue moving in the same direction it was going when the brakes were applied, even if the steering wheel is turned which produces a realistic "slide" or "drift."

STEERING ENCODER TEST POINTS

TP 72: LOGIC PROBE: Changes state twice for every complete car image revolution.
OSCILLOSCOPE: Same as logic probe.

2.16 CRASH AND PLAYTIME

This circuit has two functions: (1) it generates the crash signal when the car is driven into the pylons, and (2) it times the length of the game.

The 555 timer at B8 is the component that actually provides the timing. The amount of time it takes to charge C43 determines the pulse width out of the 555, and controls the period of time the output signal 1 SEC is high. R72 adjusts both the crash time period and the playtime by varying the amount of time required to charge the capacitor. The timer output is used to clear the crash flip-flops after a crash has occurred. It is also the input to the game timer circuit that turns the game off after it counts a certain number of 1 SEC pulses.

This circuit also generates the crash signal (CRASH A) whenever the car window encounters the race track signal by gating the two signals together at D5. A crash produces a low at D5 pin 3 that clears both B5 flip-flops. 2048V later, a low is clocked out of B5 pin 8. During the time this pin is high, flip-flop C5 is enabled and asks the question, "Is there a car on the pylons?" If the answer is "no" (i.e., one of the wheels has just barely glanced off a pylon), C5 continues to repeat the question until it is cleared at pin 13 by a low from B5 pin 8.

However, if the answer to C5's question is "yes," C5 pin 8 goes low, causing D5 pin 11 to go high. Then the "yes" information is latched into C5 at pin 5, producing a high at CRASH A and a low at $\overline{\text{CRASH A}}$. A low $\overline{\text{CRASH A}}$ produces a low SPEED KILLS signal from D5 pin 8 that stops the car motion. A low $\overline{\text{ATTRACT}}$ will also produce a low SPEED KILLS

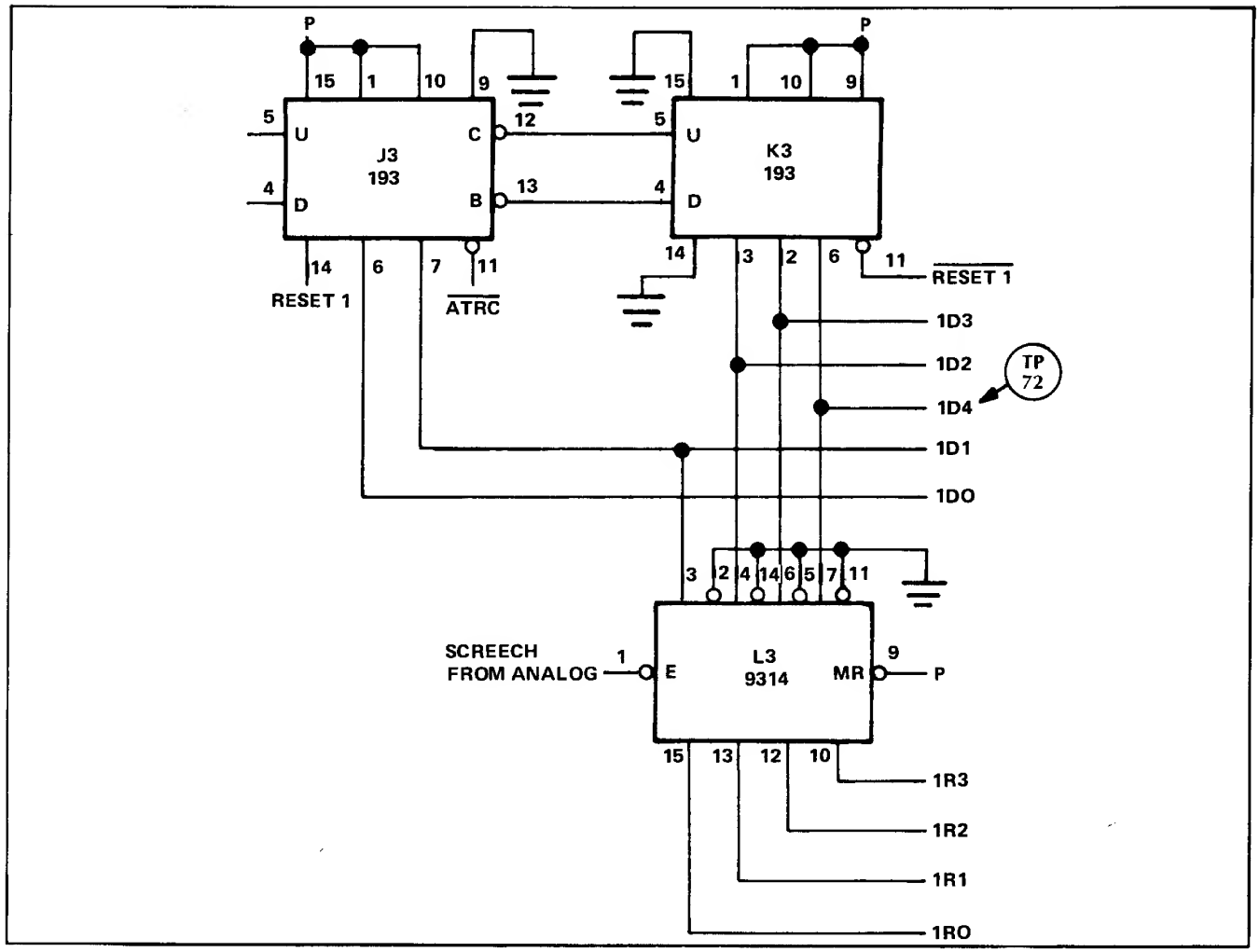

Figure 2-20 Steering Encoder

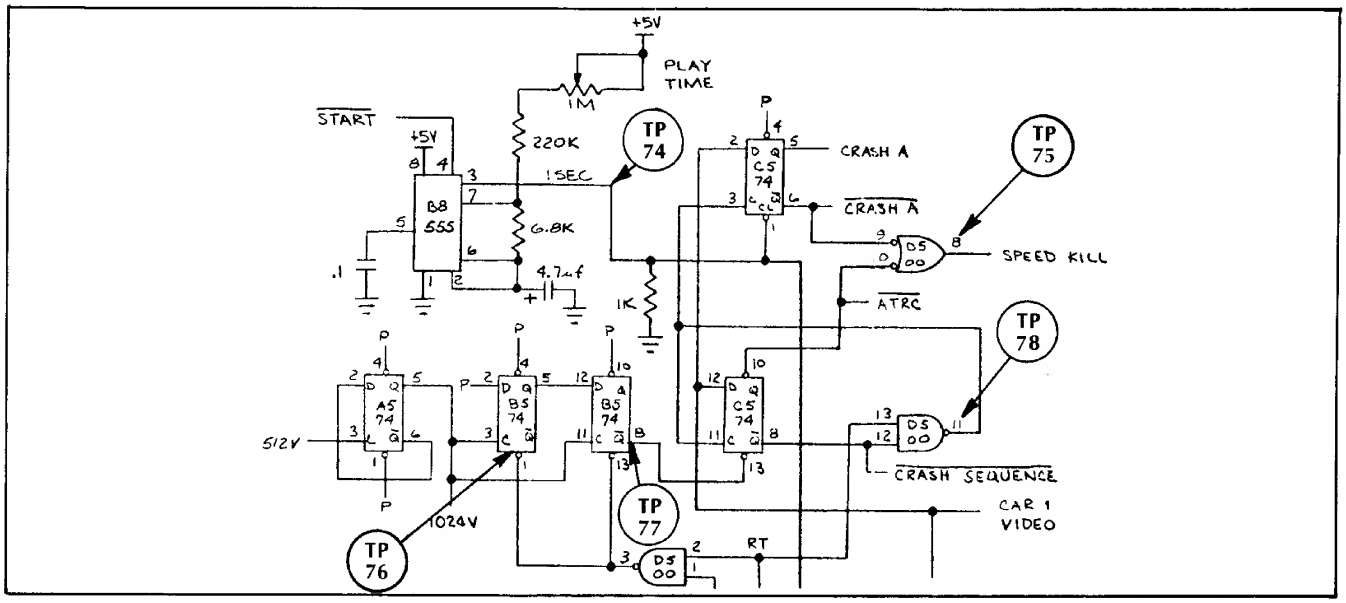

Figure 2-21 Car Crash and Playtime

and stop the car whenever the computer is in the attract mode.

CRASH AND PLAYTIME TEST POINTS

TP 74: LOGIC PROBE: High with low pulses approximately once per second when game is in the play mode. NOTE: Frequency of 1 SEC is adjustable by R72.
OSCILLOSCOPE: Same as logic probe.

TP 75: LOGIC PROBE: Low going low when the car crashes.
OSCILLOSCOPE: Same as logic probe.

TP 76: LOGIC PROBE: Drops low when the car encounters the race track.
OSCILLOSCOPE: Same as logic probe.

TP 77: LOGIC PROBE: High pulse when the car crashes.
OSCILLOSCOPE: Same as logic probe.

TP 78: LOGIC PROBE: Normally high, low and pulsing; changes to high when a crash occurs.

2.17 TRACK SELECTION

On Le Mans, every time the player completes a lap a new track is displayed. Each track is more complex than the preceding track. The track select is TSA, TSB, and TSC. During the game mode, the track select is jammed set with the lap count from the score—1E, 1F, 1G, and 1J. During the attract mode, the 193 is no longer parallel loaded but is counting at a 4-second rate. The attract mode shows Le Mans stepping through the tracks.

On lap 7 and 8, either tracks 7 and 8 or tracks 9 or 10 are displayed. The flip-flop (see ROM select page) picks up data from the 2-second timer to randomly display either tracks 7 and 8 or 9 and 10.

During extended play, the player starts with a score of zero, but play resumes on Track 5. Tracks 1-4 are the "learner" tracks and are not used for extended play. The cross-coupled 7400 gates force TSC high in the extended play mode.

2.18 MEMORY CIRCUIT

This circuit stores information which is later read out for the generation of the car image, the race track display and the score and timer displays.

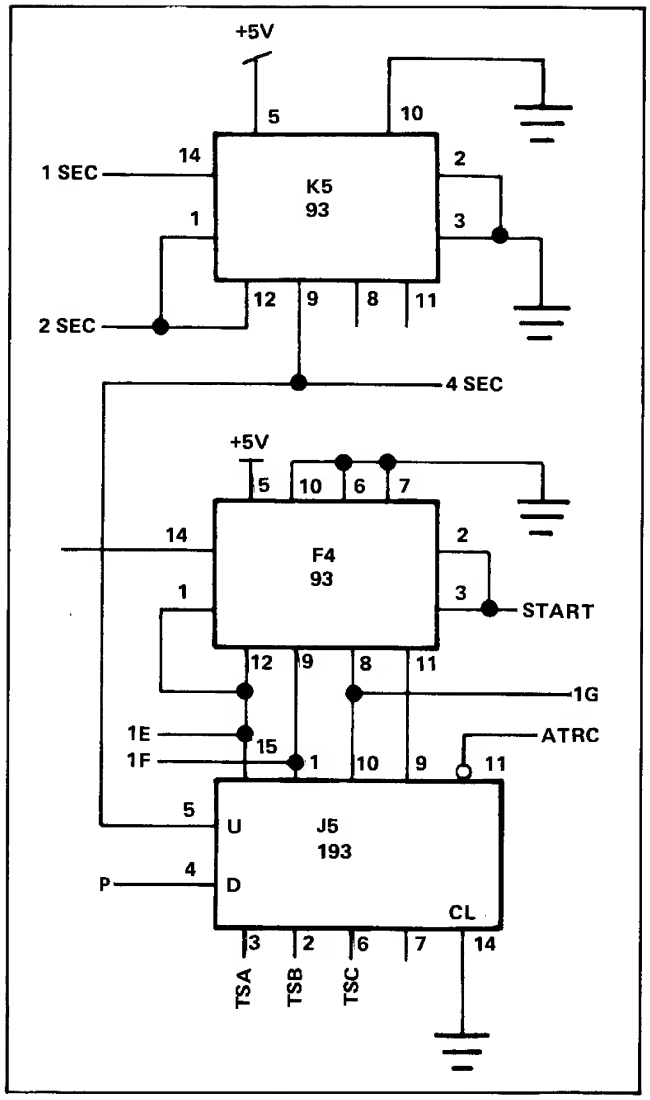

Figure 2-22 Track Selection

The main components are four multiplexers and three 16K ROMs (read-only memories) that have been specially programmed for Le Mans.

The ROMs are memory units that store binary information. This information is read out of the ROMs by the multiplexers, and these outputs go to other circuits where the information is used to form the different aspects of the car image, the race track display, etc. The ROMs each store 2048 eight-bit words.

Multiplexers select certain signals from a larger input of signals, and these output signals are the "addresses" for the ROM. A different multiplexer address is required to read out each different eight-bit ROM word. For example, when information is needed for the generation of the car image,

the multiplexers select the correct ROM address, and this selected signal reads out the desired car image information from the ROM. This ROM information is then fed into the car motion circuits, and a new aspect of the car image is displayed on the CRT.

It is important to understand how the multiplexers function, so we have included a brief discussion of basic multiplexer operation. Figure 2-23 is the schematic of a basic two-input two-to-one data multiplexer.

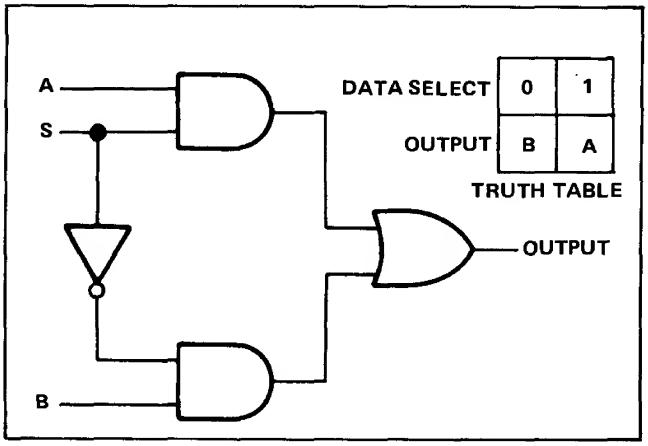

Figure 2-23 Basic Two-Input Two-To-One Multiplexer

When the data select line (S) is high, the signal at the A input is reflected at the output. When S is low, signal B appears at the output. For instance, if signal A is high while S is high, the output will also be high.

The multiplexers used to address the ROM are nothing more than elaborations on the foregoing theme. Figure 2-23 shows a two-input, two-to-one multiplexer; the ROM requires eight-input, four-to-one multiplexers.

The ROM itself is not a particularly complicated device; it is useful only because it can store so much information in a small space. Visualize the ROM as being constructed from 2048 rows of 8 diode gates each, where each gate is connected to one of the eight ROM outputs. Each diode in every row is specially programmed so that it reads out either a high or a low when it is addressed. Each row of eight gates must be addressed by a different binary number. When this number is read out by the multiplexers into the ROM address inputs, each diode in that row reads out its high or low to one of the ROM outputs.

Troubleshooting the ROM Circuit: Some typical symptoms of malfunctions in this circuit are a distorted or missing car image, portions of the race track distorted or missing, or distortion of the lap counter or game timer displays.

If you suspect trouble in this section, the first step is to replace the appropriate ROM (see Table 2-1 below). Plug-in type receptacles have been provided to faciliatate replacing the ROM. If the malfunction disappears, leave the new ROM in. However, the ROM failure rate is extremely low, so if a new ROM does not fix the problem, go on to the following troubleshooting procedures.

Table 2-1

A^9 →	0	1	0	1	0	1
A^{10} ↓ 0	RT 9	RT 10	RT 1	RT 2	RT 5	RT 6
1	Score	Car	RT 3	RT 4	RT 7	RT 8
	ROM 0		ROM 1		ROM 2	

If the ROM is alright, next check the ROM addresses at ROM inputs A^0-$A^{\not 0}$. If these addresses are not alright, check the inputs to the multiplexers, the multiplexed outputs and any gating that may be between the multiplexer outputs and the ROM inputs.

The ROM address table is invaluable in troubleshooting this section. We will use a car image problem to demonstrate the use of the address table.

To find the correct address for the car image at the ROM inputs, look under the column labeled CAR A. Then clip the scope probe to the device that the ROM information is to be read into, which is shift register F6. The probe should be placed on the pin which is used to control when the data will be entered; in this case it is the shift load input (S/L) at pin 1. When the shift load pin goes low, the information will be loaded into the register.

Then take the second probe and check the ROM address inputs and compare these with the information at the multiplexer inputs. Finally, compare all of this information with the table.

For example, first check ROM address $A^{\not 0}$ (pin 15) with the second probe, and you should see a high pulse occuring at the same time as the low shift

Table 2-3 ROM Addresses

CAR A	SCORE C	TIME D	1R.T. E	2 R.T. F	SPEED CODE G	ROM ADD	MULTIPLEX ADD
1	1	1	0	0	0	A10	
1	0	0	0	1	1	9	
1D3	1G	2G	256V	256V	256V	8	A+C+D+EFG
1D2	1F	2F	128V	128V	128V	7	A+C+D+EFG
1D1	1E	2E	64V	64V	64V	6	A+C+D+EFG
1DØ	1D	2D	32V	32V	0G0 1 STOP	5	A+C+D+EF+G
$\overline{32H}$*	16V	16V	16V	16V	1R3 0 STOP	4	A+C+D+EF+G
1D4	8V	8V	512H	512H	1R2	3	A+CD+EF+G
104	4V	4V	256H	256H	1R1	2	A+CD+EF+G
103	1C	2C	128H	128H	1RØ	1	A+C+D+EF+G
102	1B	2B	64H	64H	1DØ	0	A+C+D+EF+G

*$\overline{32H}$ 1 FIRST PART OF CAR
0 SECOND PART OF CAR

load pulse. Note that this correctly corresponds to the ROM address table. Then look at A^9 (pin 8); again there should be a high pulse occuring simultaneously with the low shift load pulse. Now go to A^8, and you should see signal 1D3 pulsing high and low as the steering wheel is rotated.

Continue to check all the address inputs in the same fashion. If you find some information that does not correctly correspond, start checking back through the multiplexers and gates, if any. If all the information checks out, examine the component that information is being loaded into (shift register F6 in this case).

The multiplexers are most easily checked using a logic comparator (see subparagraph 2.1.1). The comparator will yield fast and accurate results. If you do not have a comparator, use the following procedure: first tie both multiplexer select lines low and look at the information from pins 7 and 9 (multiplexed outputs) which must match the inputs at pins 6 and 10 (multiplexer inputs). If alright, tie S_1 high and S_2 low, and pins 7 and 9 should match 5 and 11. If alright here, tie S_1 low and S_2 high, and 7 and 9 should equal 4 and 12. To check the last set, tie both select lines high and pins 7 and 9 should match 3 and 13. The enables 0-2 enable the appropriate ROM, depending on the function. Signal ABCD is true for score and car display.

To troubleshoot the multiplexers, first check the multiplexer inputs. If any of these do not check out, go to the section that produces the malfunctioning signal and locate the malfunction there. However, if all the multiplexer inputs are alright, check the data select lines by going to gates H3 and L5. Verify the presence of the correct Ld1B, VLd1, 512H and $\overline{\text{SCORE DISP}}$ inputs. If all of the data select inputs are also alright, you must check the multiplexers themselves.

2.19 WINDOW CONCEPT

After the video signals are generated by the computer, they must be displayed in the desired part of the CRT. This is done by directing the signals to appear only within a certain area or "window." The key idea behind the window concept is that of limits or boundaries.

Your video probe is a test instrument that can be used to display the windows directly on the CRT. To see a graphic display of windows, attach one probe clip to the negative (−) side of the video coupling capacitor (C44) and run the other end across the sync counter outputs.

You probably noticed, as you ran the probe across the vertical sync outputs, that the resulting windows were horizontal in appearance. The most confusing part of the window concept is the fact that it takes vertical signals to define a horizontal window and vice versa.

Examine Figure 2-25a and notice the vertical signal 256V that defines a horizontal line approximately half way down the CRT. Since the raster is composed of 521 half lines (or 260.5 whole lines), the signal 256V "tells" the electron beam to modulate its scan

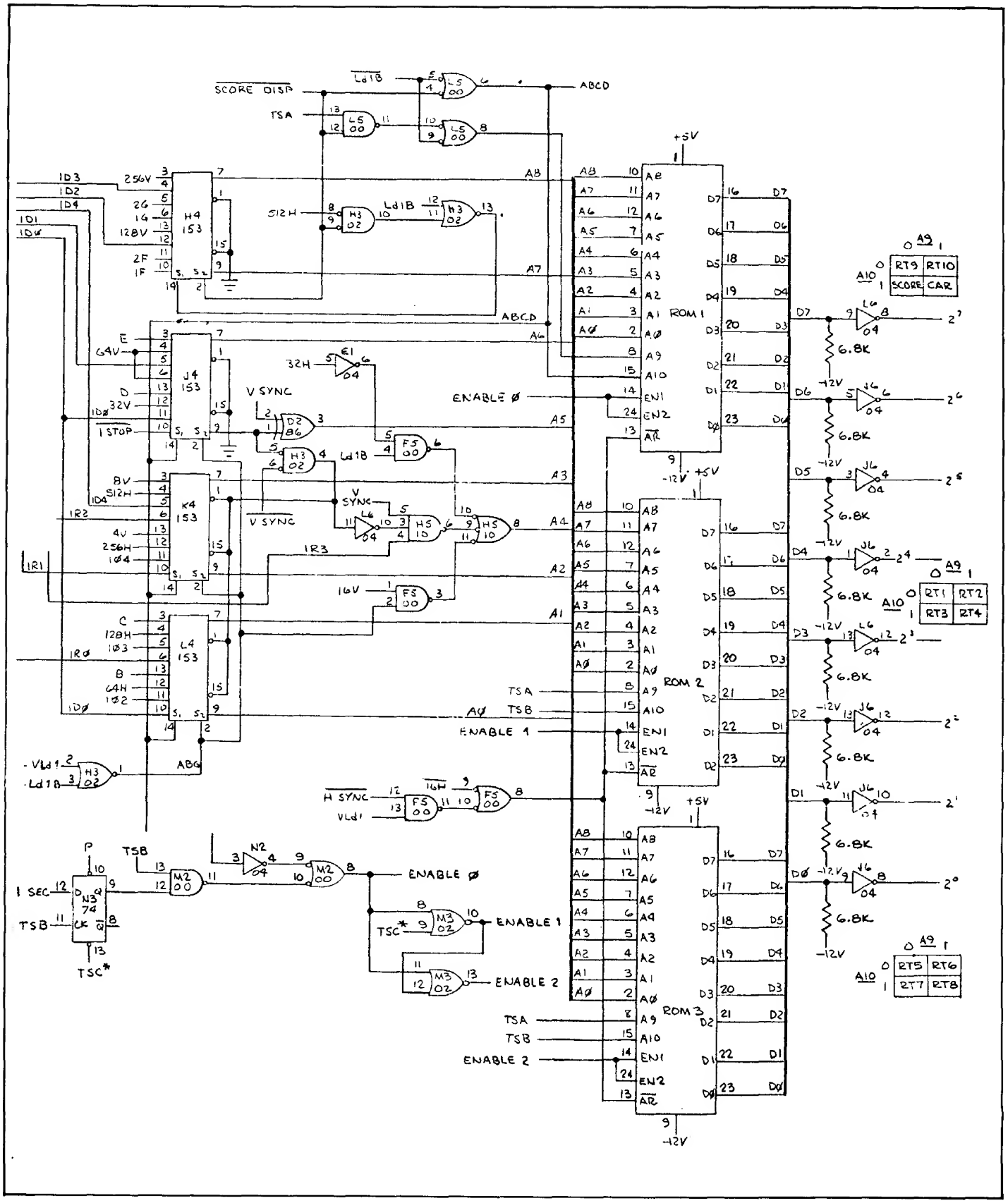

Figure 2-24 Memory Circuit

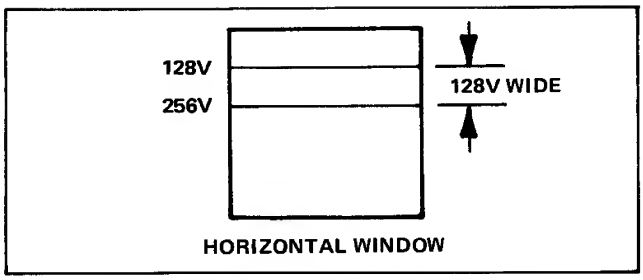

Figure 2-25a Horizontal Window

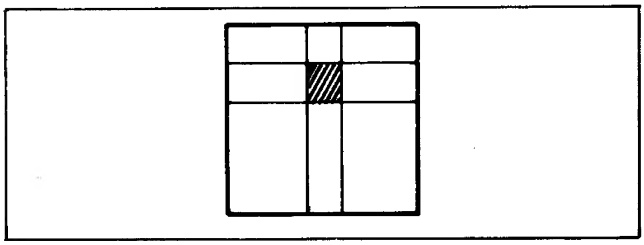

Figure 2-25b Complete Window

at the 256th half-line down from the top of the screen and the lower half of the screen is white. This is why it takes a *vertical* signal to define a horizontal line a certain *vertical* distance down the CRT.

If we create a similar line, except 128 half-lines down the CRT, the result will be a band 128 half-lines wide bounded at the top by 128V and at the bottom by 256V. This band is known as a horizontal window.

A complete window is created by generating a similar vertical window and gating the two windows together, so that we have an area with all four sides defined.

The video signals are gated with the window so that they can only appear when the window occurs. The result is that the video can then only appear within the window.

2.20 INTRODUCTION TO MOTION

The illusion of car motion is achieved by rapidly shifting the car image in the same way the illusion of motion is created on the motion picture screen by the film in the projector. The eye perceives this image shift as continuous motion because of a phenomenon known as *retinal afterimage*. The last seen image is "remembered" for a short time, and as the position of the image is shifted a number of times in rapid succession, the eye "overlaps" the images and perceives the shifting process as continuous motion. Since the TV monitor has a frame rate of 30, it is possible to shift the car image so rapidly that the eye is completely fooled.

The speed or velocity of the car image is determined by the shift rate/frame rate ratio. If the image is shifted once every frame it will appear to move much faster than if it were shifted only once every three frames. The direction of the image is controlled by varying the rate at which the car image windows are shifted with respect to each other.

Notice the vertical motion window in Figure 2-26a. As this window moves up and down, the image contained within it also moves up and down. Figure 2-26b shows the horizontal motion window that controls how the image is shifted from left to right. When the two windows are combined, the image can be vectored at any angle by individually varying the rate each window is shifted.

The speed of the image is controlled by shifting the window with respect to sync. If the window frequency is the same as sync, it will be displayed in exactly the same place during each TV frame and it will appear stationary. However, if the window is generated a little slower or faster than sync, it will be shifted a certain amount each frame and will appear to move.

This is done by entering different binary codes at the parallel inputs to the 9316 counters of the motion circuits. The stop code is the binary number that times the window with sync and therefore stops motion. Other codes cause a change in this relationship, and the window is shifted with respect to sync.

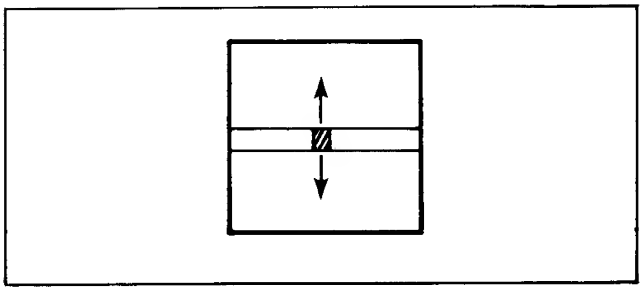

Figure 2-26a

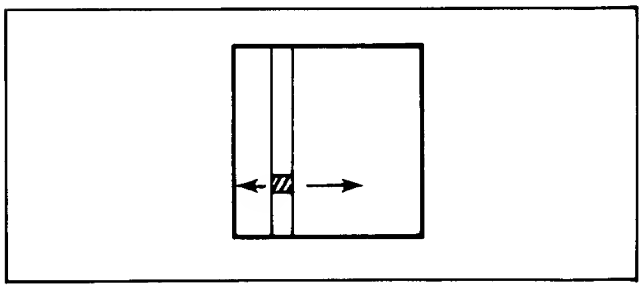

Figure 2-26b

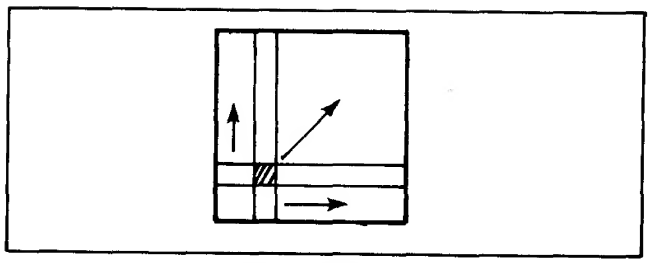

Figure 2-26c

2.21 HORIZONTAL COUNT

H COUNT is used to clock counter J2 (vertical positioning for the car image) twice per line.

Capacitor C9 and resistors R1 and R2 create a very short reset pulse for both L1 flip-flops, and this produces a high at both $\overline{Q}$ outputs. On the first 1H pulse, the $\overline{Q}$ output at L1 pin 2 goes low, while L1 pin 3 goes high; the $\overline{Q}$ at L1 pin 6 remains unchanged. On the second 1H pulse, L1 pin 2 goes high and L1 pin 6 goes low. On the 1H pulse, both L1 pin 2 and L1 pin 6 go low and stay low until both flip-flops are again reset by the capacitor and resistors.

H COUNT TEST POINTS

TP 79: LOGIC PROBE: High and pulsing.
OSCILLOSCOPE: See Figure 2-27.

TP 80: LOGIC PROBE: Low and pulsing.
OSCILLOSCOPE: See Figure 2-27.

2.22 VERTICAL CAR MOTION

When $\overline{VLd1}$ is high, the ROM data is latched into H7 and appears at the outputs until $\overline{VLd1}$ drops low again. This information is loaded into the parallel inputs of J7 when the line from L5 pin 3 goes low.

The counters start counting from the last number loaded in by L5 pin 3. They count up to 4096 , at which time a new number is loaded in.

The stop code for vertical motion is 3575 (1-1-1-0/1-1-1-1/1-0-1-1). When this number is entered into the counters, car motion ceases (4096 minus 3575 equals 521, which is the sync frequency).

However, as the least significant digits of the stop code are changed, the 9316s begin their count from a different number and the resulting car window frequency is changed. For example, if the number 0-1-1-0 is loaded into J7, the window will move down at the slowest velocity (4096 minus 3574 equals 522 which is slightly faster than sync).

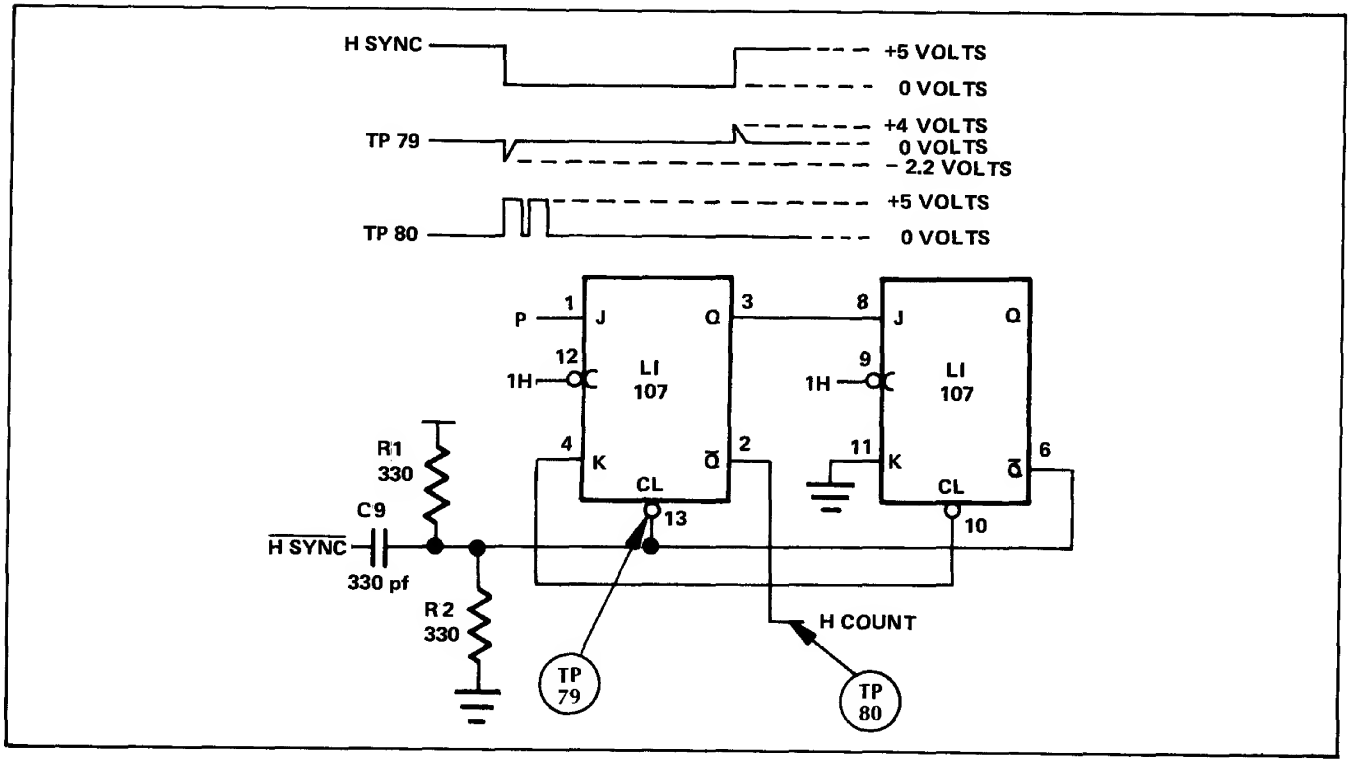

Figure 2-27 Horizontal Count Circuit and Waveforms

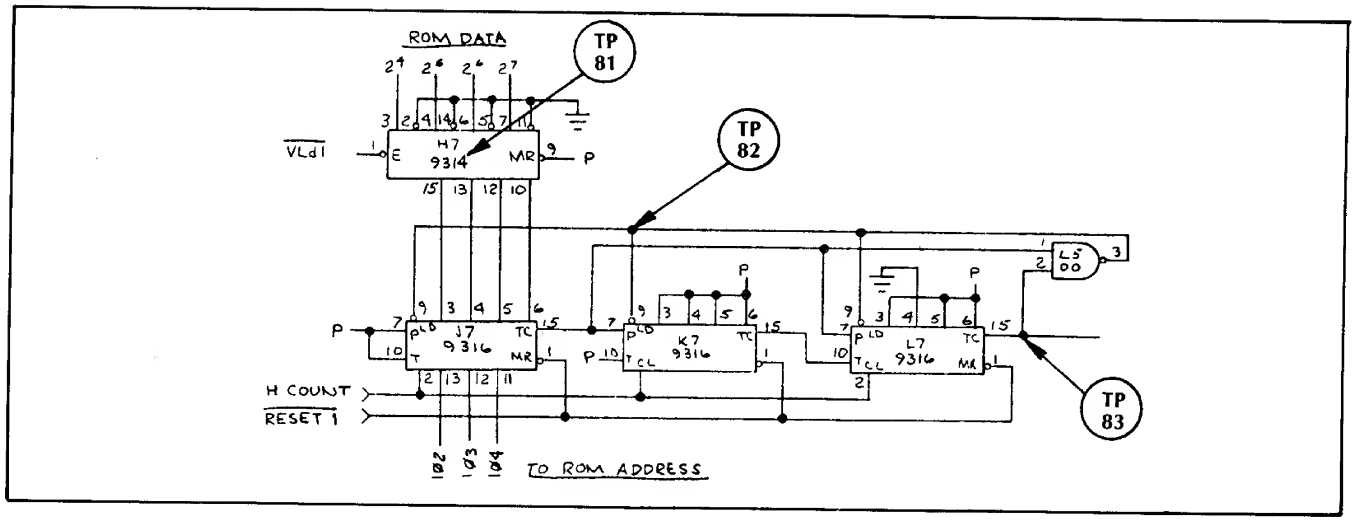

Figure 2-28 Vertical Car Motion

Notice the $\overline{\text{RESET 1}}$ line which resets the car image at the start of the game or after the car has been driven off the track.

VERTICAL CAR MOTION TEST POINTS

TP 81: Hold pin 1 of H7 low. Then using the oscilloscope or the logic probe, check to see if the input signals at pins 3, 4, 6 and 7 are reflected at output pins 15, 13, 12 and 10. NOTE: CRT images break up when you hold VLd1 low.

TP 82: To check counters, first look at pins 9 with the video probe. You should see a thin black line that moves with the car and is parallel to the bottom edge of the CRT.

Then hold pins 9 low successively and check to see if the input signals of each counter (pins 3, 4, 5 and 6) are reflected at the outputs (pins 13, 12, 11 and 8).

TP 83: VIDEO PROBE: At this test point, you will see the vertical car motion window appearing as a white horizontal band.

2.23 HORIZONTAL CAR MOTION

The only real differences between the horizontal and vertical motion circuits are that the horizontal counters are clocked by CLOCK rather than H COUNT, and that different numbers are loaded into the counters.

VLd1 is normally low and goes high once per field. During the time VLd1 is low, the stop code 0-0-0-1 is loaded into E7. When VLd1 goes high, the ROM data is entered into E7 causing the horizontal motion window to shift.

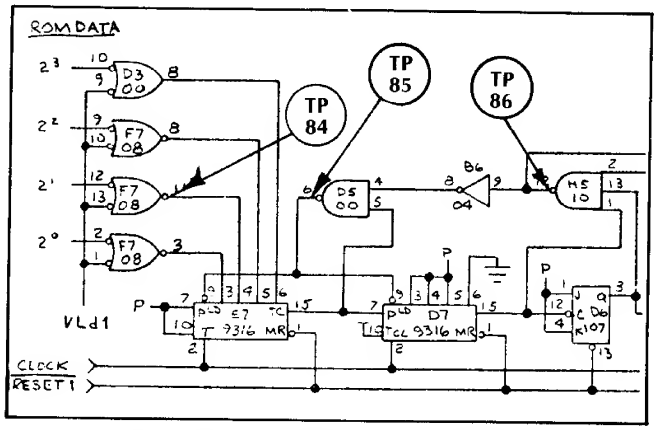

Figure 2-29 Horizontal Car Motion

HORIZONTAL MOTION TEST POINTS

TP 84: Hold VLd1 low. This should generate the stop code 0-0-0-1 at pins 3, 4, 5 and 6 of E7. Then hold pins 9 of E7 and D7 low and the stop code should be reflected at output pins 14, 13, 12 and 11 of E7 and D7.

TP 85: VIDEO PROBE: Thin black vertical line that moves with the car image.

TP 86: VIDEO PROBE: The video probe will reveal the horizontal car motion window appearing as a black band moving with the car image.

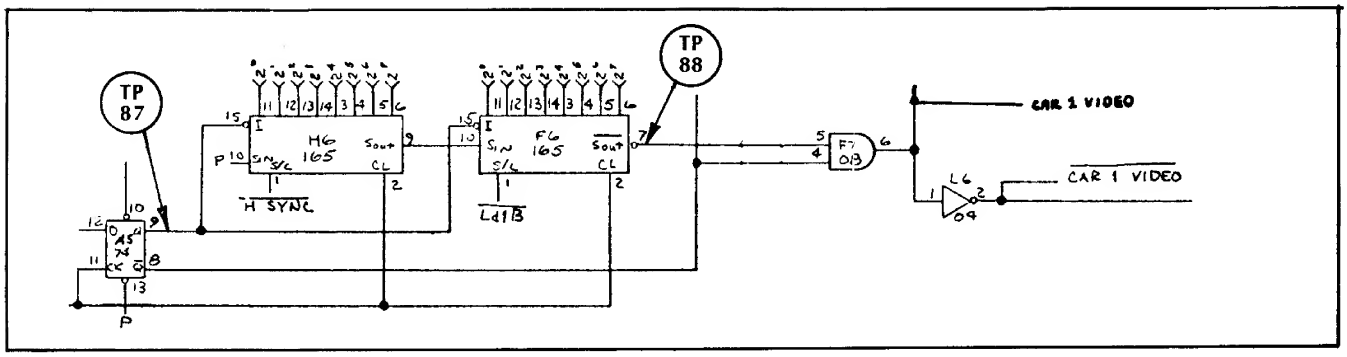

Figure 2-30 Car Display

2.24 CAR DISPLAY

The car display circuit uses both the outputs of the ROM and the outputs of the car motion circuits to generate the different aspects of the car image. The ROM supplies the necessary information for the car images; the car motion circuits move the car windows, and hence where the car image can appear. The display circuit displays all this information on the CRT.

Since the data at the ROM outputs are in parallel form, a shift register is necessary to convert this parallel (simultaneously occurring) information to serial (sequentially occurring) information. This is necessary so the information bits can be loaded one after another to be displayed by the electron beam as it sweeps across the CRT. Two shift registers are needed because the car image is made up of 16 bits, and each shift register can only process 8 bits of information at a time.

The information is loaded at different times into the shift registers by $\overline{\text{H SYNC}}$ and Ld1B. When $\overline{\text{H SYNC}}$ and Ld1B both go low, one set of car information is loaded into H6 by $\overline{\text{H SYNC}}$ and the register latches up this information when $\overline{\text{H SYNC}}$ returns high. Ld1B is still low and another set of car information is loaded into F6 and latched up when Ld1B returns high.

As long as the clock inhibit (I) of a shift register is high, the information remains latched in the register. However, when input I goes low, the clock pulses at pin 2 read out the information serially. The clock inhibit goes low during the car window signal which comes from the Q output of A5. The car window is the intersection of the vertical and horizontal car motion windows.

Thus, when the inhibit inputs of the registers go low, F6 reads out its latched-up information out pin 7 (the serial output) while H6 is simultaneously reading its information into F6. When all the information originally stored in F6 is read out F6 pin 7; F6 then reads out the information read into it by H6. All this information is gated with the car window at F7 to form CAR 1 VIDEO—the final car image signal.

CAR DISPLAY TEST POINTS

TP 87: VIDEO PROBE: Black square superimposed over car image.

TP 88: VIDEO PROBE: A number of horizontal white lines covering CRT from top to bottom. One or two of these lines intersect the car image and stop at the car.

2.25 RACE TRACK DISPLAY

The information for the generation of the race track display is read out of the ROM, and this data is loaded into the parallel inputs of shift register E6 by $\overline{\text{RT CLOCK}}$.

$\overline{\text{RT CLOCK}}$ is created at D3 by the gating of Ld1B with the modified 32H signal. The rising edge of 32H charges capacitor C38, which discharges through R54. It provides a very sharp high-going spike: there is also a low-going spike, but since it is below threshold voltage it cannot enable D3 and only the high-going spike is passed. This signal is gated with Ld1B, which allows only race track data to enter the shift register.

There are eight $\overline{\text{4H}}$ pulses for every $\overline{\text{RT CLOCK}}$ pulse; the race track information is clock out E6 pin 9 serially by every 4H pulse.

The resulting signal contains both the race track and the score information. Since the score window is generated at a different time than when the score information is read out of the ROM, the score window ($\overline{\text{SCORE DISP}}$) must be delayed at C3 by 32H so that the resulting score window occurs simultaneously with the score information and in the correct part of the CRT.

$\overline{\text{SPECIAL DATA}}$ prevents the race track data from being displayed when special information such as the finish line, the checkpoints and the score need to be displayed. Otherwise, race track images would be "written over" the special data. Whenever 2^0 and 2^3 go low and while 2^1 and $\overline{\text{Ld1B}}$ are high, the special data is clocked out 32H later.

The sizes of the pylons and the check points are determined by J1 and B3. This information is gated with SCORE DELAY at B3 and then with the race track and score information at C6 to form the complete race track signal (RT).

RACE TRACK DISPLAY TEST POINTS

TP 89: OSCILLOSCOPE: Frequency: 4.5 μs; duration: 0.1 μs. NOTE: No RT CLOCK pulse present when Ld1B goes low.

TP 90: VIDEO PROBE: Vertical 4H bars covering screen from left to right. NOTE: Wider band in center is due to reset pulse.

TP 91: VIDEO PROBE: All race track windows visible.

TP 92: VIDEO PROBE: White windows over score and timer displays.

TP 93: VIDEO PROBE: Dark check point, finish line and non-delayed score and timer windows.

2.26 TIME AND SCORE STORAGE

The primary functions of this circuit are to count the number of laps scored and the amount of elapsed time.

Laps are scored only by passing the race course checkpoints in proper order. If the check points are passed correctly, the lap score is increased by an increment of two. The information needed for generating the score images is contained within the ROM and read out by the following process.

The ROM data of the checkpoint location at the parallel inputs of E5 are loaded into that latch when $\overline{\text{RT CLOCK}}$ goes low and is latched when $\overline{\text{RT CLOCK}}$ goes back high.

The latched information enters the A and B inputs of the one-of-four decoders E3 and E4. The state of the E input controls the state of the selected output signal; the output signal is selected by the states of the A and B inputs. For example, if both A and B are low, output 0 will be selected; if E is low, the selected output 0 will also be low. If A is high and B

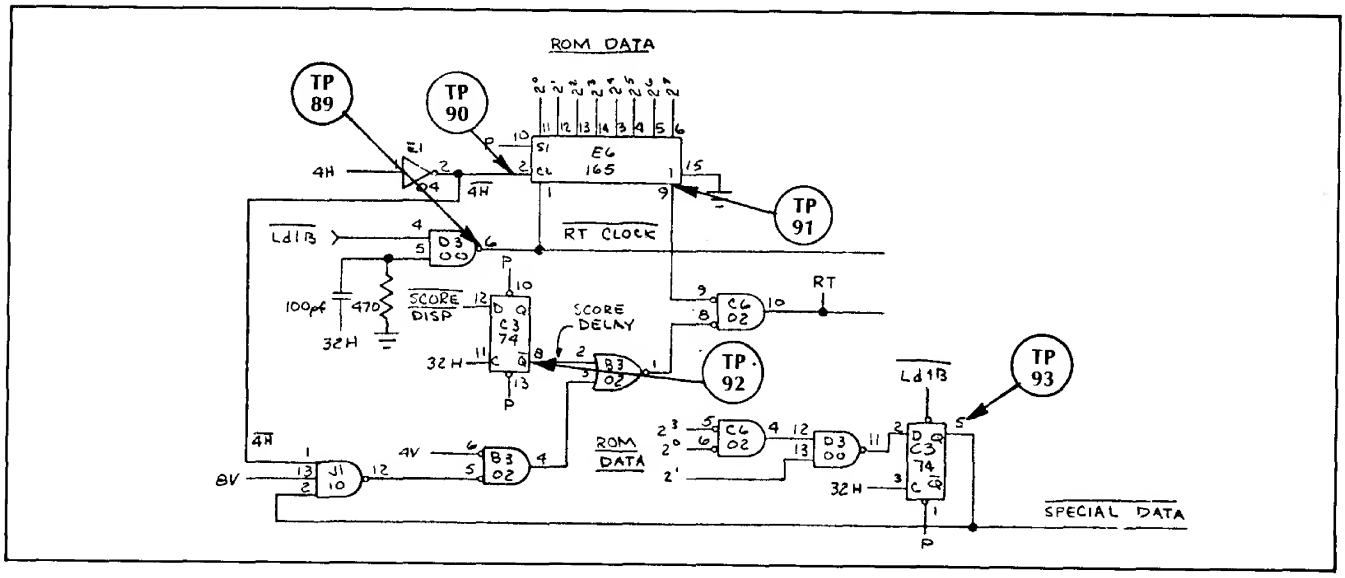

Figure 2-31 Race Track Display

is low, output 1 will be selected and if the E input is high, then output 1 will be high.

$\overline{\text{SPECIAL DATA}}$ (the signal from the race track display section containing the data for score display, oil slick, finish line and the checkpoints) is the E input to E4. Whenever $\overline{\text{SPECIAL DATA}}$ is low, the selected output of E4 will also be low.

For instance, when the checkpoint information is to be read out of the ROM, A will be low and B will be high. This selects output 2 which will be low because E ($\overline{\text{SPECIAL DATA}}$) is also low. Output 2 then will contain all the checkpoint information, which is then sequentially selected by E3.

Output 0 of E4 is the finish line signal; however, it is 64 clock pulses wide—too wide for a functional finish line—so it is gated with $\overline{\text{RT CLOCK}}$ at B3. Since $\overline{\text{RT CLOCK}}$ is a spike of very short duration, the resulting finish line signal at B3 pin 13 will also be of very short duration and appear as a thin line. This thin finish line is then chopped into segments by gating it with 4V at A6 to give it a "dotted line" effect.

Laps are scored only by passing course checkpoints in the specified order: this is accomplished by selectively enabling latch F3. At the beginning of a new game, $\overline{\text{START}}$ goes high, clearing F3 so it can accept new information. Clearing F3 produces lows at pins 15, 13, 12 and 10 (1A, 1B, 1C and 1D); this causes lows to appear at pins 4, 6 and 7 and a high to appear at pin 3.

When the car passes through the first checkpoint, the car signal at pin 1 will go high, enabling the high at pin 3 to appear at pin 15, which in turn holds pin 4 high. When the car passes through the second checkpoint, the high at pin 4 will be enabled through to pin 13 and so on. This continues until the car has passed all the check points, at which time 1D will go high, incrementing counter F4 and simultaneously returning a low to pin 3. A low at pin 3 forces a low to appear at pin 15, which in turn causes pin 4 to be low. This then causes pin 13 to be low. This series continues until all the outputs are low and the latch is ready to record a new set of checkpoint and car image intersections.

The information at 1A, 1B, 1C and 1D must be converted to a binary code by gates A2, A3, D2 and E2 so that multiplexer D4 can correctly address the ROM score image information. The following truth table shows how this is accomplished.

D4 is a quad two-to-one multiplexer that selects either the score storage information or the game timer information. The signal is selected by 512H, and the outputs of the multiplexer (B, C, D and E) become inputs to the ROM multiplexers. Basically, these outputs tell the ROM what number to look up and read out for the score and timer number images stored within the ROM.

The ROM only stores 39 sets of number display information (the even numbers from 0-78) which limits the numbers which can be displayed for the score and game timer. The score will count up to 78 and the game timer counts down from 78.

C4 is the ones counter for the game timer and B4 is the tens counter. When $\overline{\text{START}}$ goes low, these counters begin counting down from the number loaded into the parallel inputs (78) and counts down by twos. When both counters reach zero, a low "borrow" (or END GAME) pulse is generated that resets the game to the attract mode. The length of the game can be changed by varying the 1 SEC pulses. Longer pulses are counted more slowly by the counters and thus the total game length is longer.

Table 2-4 Truth Table for Checkpoints

	TP 94 E5 pin 10	TP 95 E5 pin 12	TP 96 E5 pin 13	TP 97 E5 pin 15	TP 99 D4 pin 14	TP 100 D4 pin 11
NO CHECKPOINTS PASSED	0	0	0	0	0	0
1 CHECKPOINT PASSED	0	0	0	1	0	1
2 CHECKPOINTS PASSED	0	0	1	1	1	0
3 CHECKPOINTS PASSED	0	1	1	1	1	1
4 CHECKPOINTS PASSED	1	1	1	1	0	0

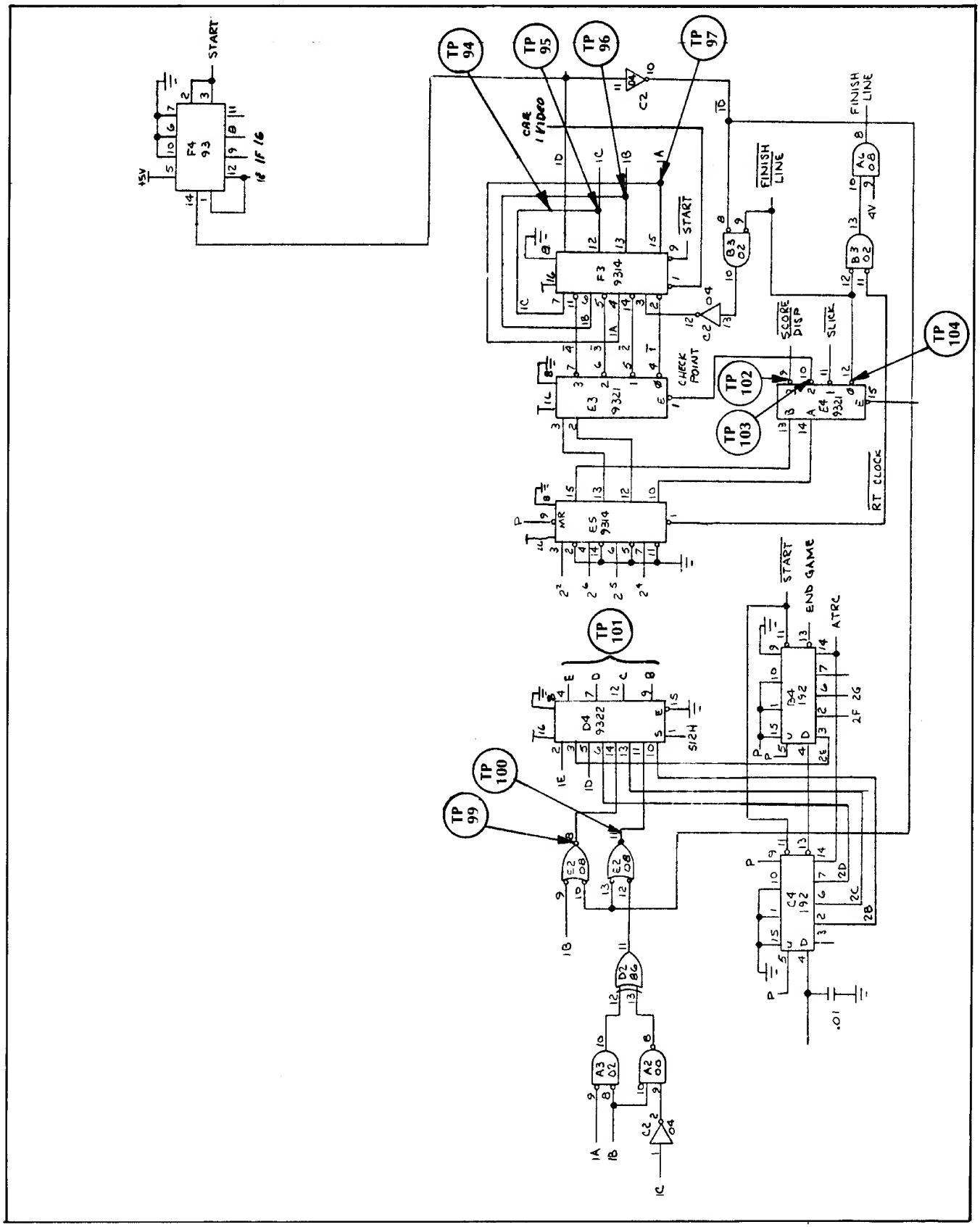

Figure 2-32 Time and Score Storage

TIME AND SCORE STORAGE TEST POINTS

TP 94-100: See truth table (Table 2-4).

TP 101: When 512H is low, B, C, D and E will read out the binary code for the score.
When 512H is high, B, C, D, and E will read out the binary code for the timer.

TP 102: VIDEO PROBE: Two black non-delayed score and timer windows.

TP 103: VIDEO PROBE: Four black check point windows.

TP 104: VIDEO PROBE: One black finish line window.

VIDEO SUMMER

A separate 5 volt power supply is used to power-M7, the video summer. This is to reduce the effect of noise on the video output.

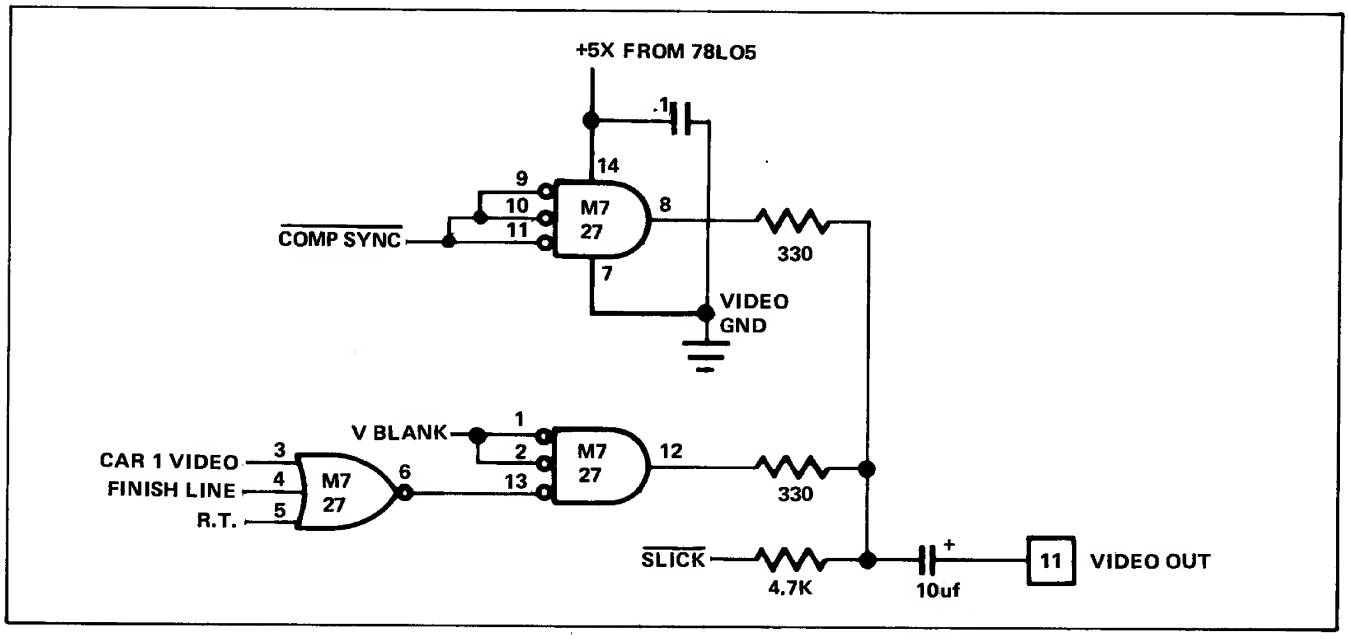

Figure 2-33 Video Summing

III. SCHEMATICS, DRAWINGS AND PARTS LISTS

Number	Title
A005886	Parts List and Drawing Top Assembly
A005884	Parts List and Drawing Control Panel Assembly
A005882	Parts List and Drawing Double Foot Pedal Mounting Assembly
005904	Schematic Harness Wiring
A005885	Parts List and Drawing Electronics Tray Assembly
A005844	Schematic, Parts List and Assembly Printed Circuit Board
(none)	Schematic Motorola XM501/701 Monitor

LEMANS

ATARI™
Innovative leisure

ASSEMBLY TITLE / ASSY - TOP CABINET **P/L** A005886

PARTS LIST SPECIFICATION Page 1 of 1

Drawn		
Checked	Mech. Eng.	
Proj. Eng MF	Elec. Eng	REV. C

Rev.	Description	Date	Apprv.	Rev.	Description	Date	Apprv.
A		6/25/76					
B	Rev per ECN 2782	6/28/76					
C	Rev per ECN 2812	7/6/76					

Item	Part Number	Qty.	DESCRIPTION
1	A005862-02	1	Cabinet Assy with Graphics
2	A005884	1	Control Panel Assy
3	A005882	1	Metal Foot Pedal Assy
4	A005430	1	Display Assy
5	A005883	1	Sliding T.V. Shelf Assy
6	A005912-02	1	R.F. Shielding Enclosure Assy
7	A004132-XX	1	R.F. Shield P.C. Assy
8	A005844	1	P.C.B. Assy, Lemans
9	A005885	1	Electronics Tray Assy
10	A003637-11	1	Coin Door Assy
11	003053	2	Retainer, Plex
12	75-99090006	6	Weldnuts #10-32
13	82-8016	6	Screws, Mach. THD., Allen Socket, Button Hd, #10-32 x 1"
14	005892	1	Lite Box Plexiglas with Graphics
15	005378-02	1	Playfield Plexigal with Graphics
16	005894	1	Bezel, Cardboard with Graphics
17	005419	1	Speaker Grill, Cover
18	73-77004	4	Rivets, 3/16 x .68 Long
19	75-5524B	2	Carriage Bolts, ¼-20 x 1½
20	75-015S	2	Washers, Flat ¼
21	75-045	5	Washers, Split Lock ¼-20
22	72-6808	1	Screw, S.M. #8 x ½ Phil., Pan. Hd.
23	72-5524	1	Screw, Mach., Hex Hd., Stl. Cd. Plate ¼-20 x 1½ Lg.
24	72-6824	4	Screws, Sheet Metal #8 x 1½, Phil, Pan Hd.
25	72-6812	6	Screw, Sheet Metal #8 x 3/4, Phil, Pan Hd.
26	75-5124B	6	Carriage Bolts, #10-24 x 1½
27	75-010S	6	Flat Washers, #10
28	75-040	6	Lock Washers, #10-24
29	75-911S	6	Hex Nuts, #10-24
30	002728	2	Mntg. Brkt, Control Panel
31	75-935	4	Wing Nuts #¼-20
32	A005898	1	Light Shield Assy
33	72-6610	4	Screw, S.M. #6 x 5/8, Phil. Pan Hd.
34	TM-077	1	Techincal Manual
35	A005901-XX	1	Shipping Container
36	005233	1	Rear Door Seal
37	82-1824	10	Screws, Wood, #8 x 1½, Flat Hd. Phil.
38	A005906	1	Rear Door Assy
39	78-6601216	A/R	Aluminum Foil (appx 2 ft)
40	005908	1	Extended Play Score Card

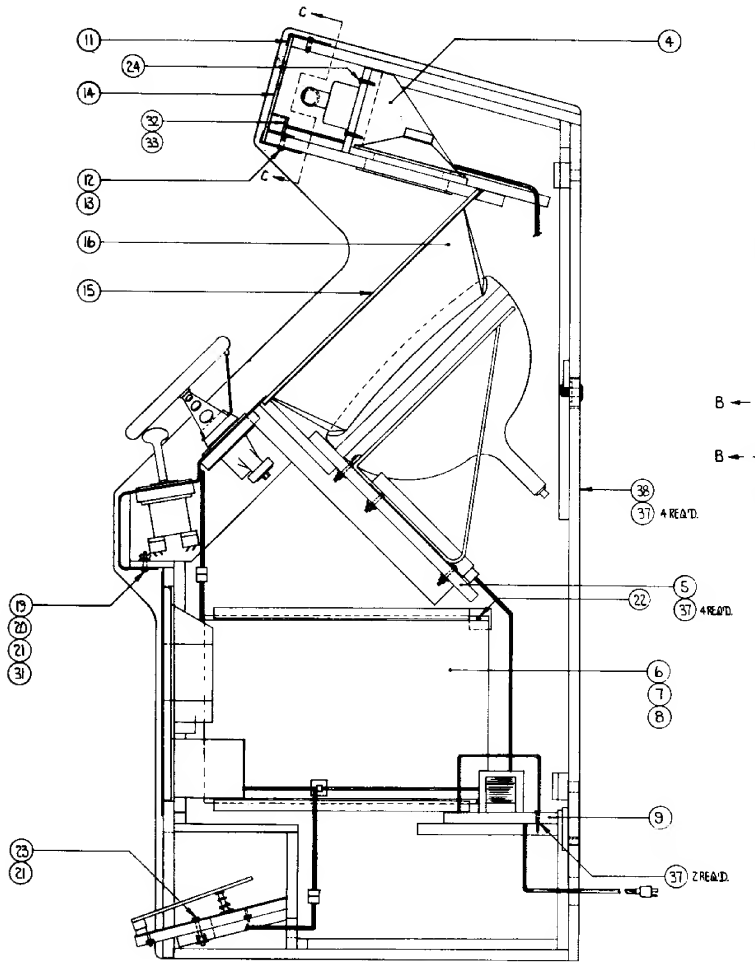

SECTION AA

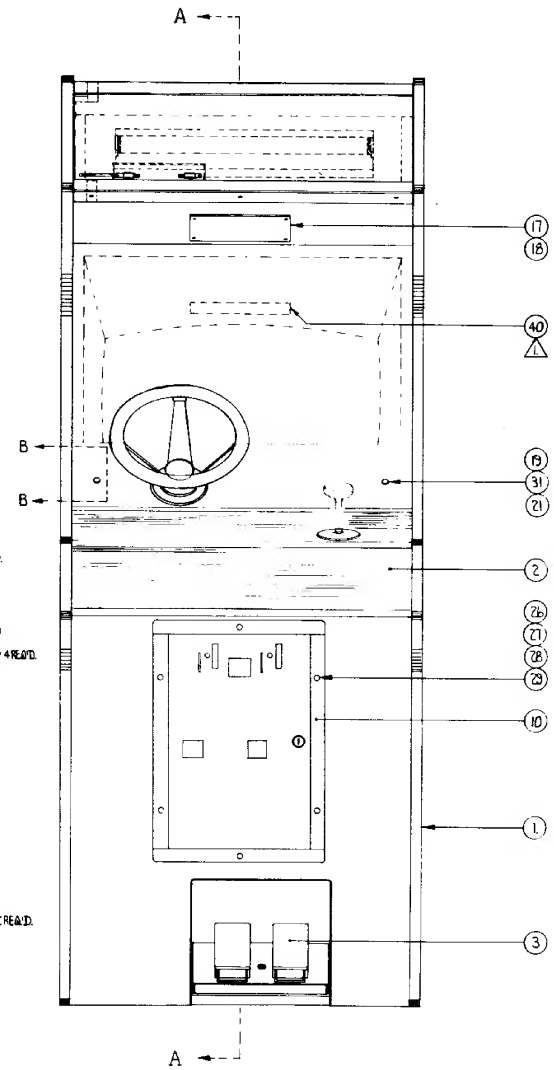

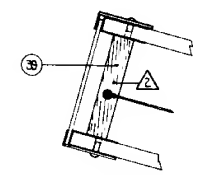

SECTION CC

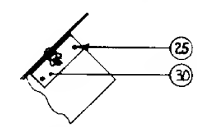

SECTION BB. TYPICAL TO BOTH SIDES.

NOTES:

1. ITEM 40 TO BE PLACED IN CASH DRAWER FOR SHIPMENT.
2. ITEM 39, ALUM. FOIL, IS TO BE PLACED ON CABINET IN THREE PIECES. FOIL MUST MAKE CONTACT WITH PLEX. RETAINERS AND WITH EACH OTHER SO THAT BOTH RETAINERS ARE GROUNDED.

NOTES: UNLESS OTHERWISE SPECIFIED

UNLESS OTHERWISE SPECIFIED DIMENSIONS ARE IN INCHES TOLERANCES ON ANGLES ± 45° SURFACE FINISH ✓	DO NOT SCALE DRAWING DRAWN BY DATE	ATARI ATARI INCORPORATED 14600 Winchester Boulevard Los Gatos, California 95030
MATERIAL SEE PIL A005886	CHECKED ENGINEER	TITLE CABINET, TOP ASS'Y
FINISH	PROJECT ENGINEER MAG ENGINEER	SIZE D · DRAWING NO A005886 · REV C SCALE · SHEET 1 OF 2

REVISIONS				
ZONE	SYM	DESCRIPTION	DATE	APPROVED
	A	SEE SHEET 1 OF 2	6-22-84	

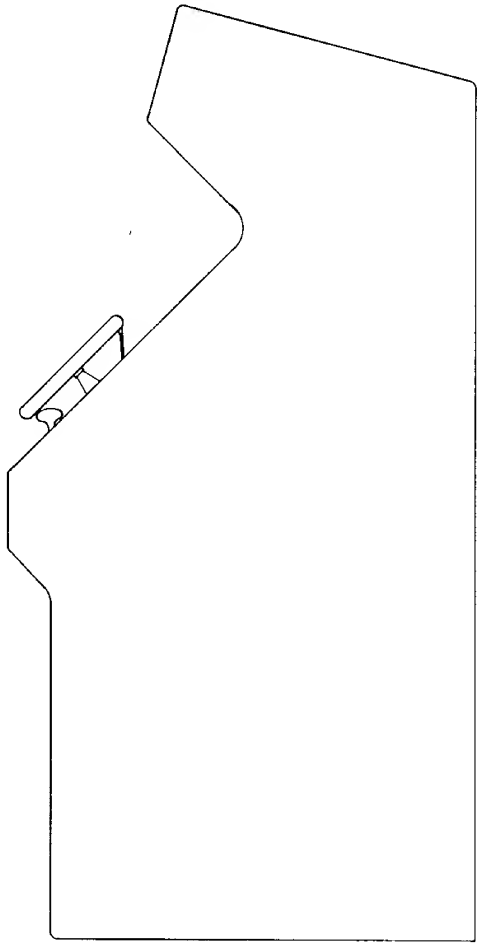

VIEW AA

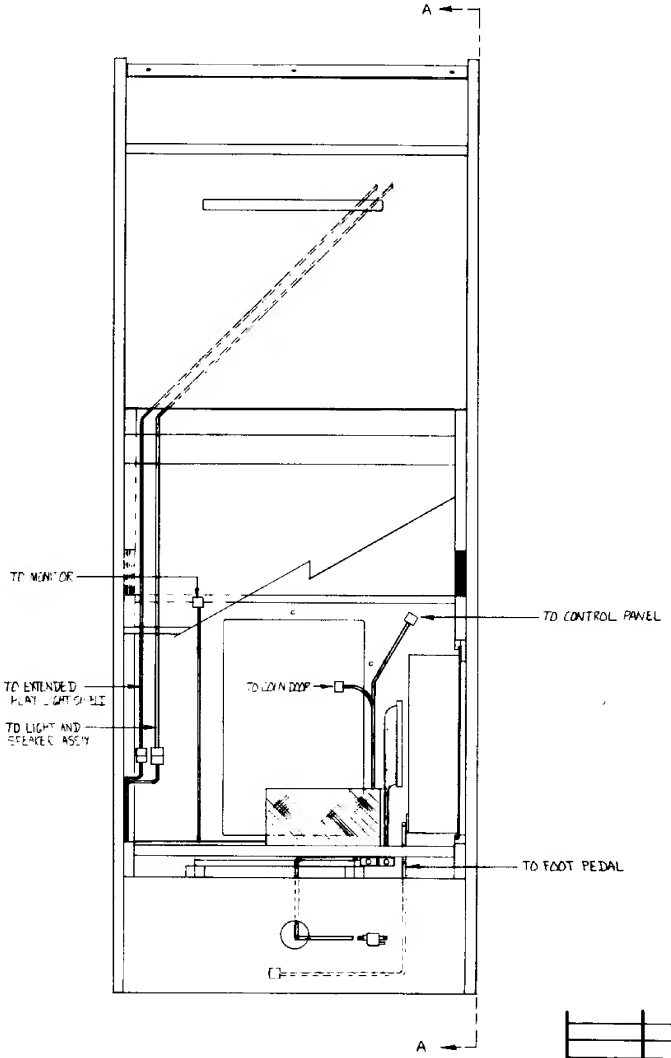

OUTSTANDING ECNs	

NOTES: UNLESS OTHERWISE SPECIFIED

NEXT ASSY	LEMANS	USED ON	
APPLICATION			

UNLESS OTHERWISE SPECIFIED DIMENSIONS ARE IN INCHES TOLERANCES ON ANGLES ± 1/2° SURFACE FINISH ✓	DO NOT SCALE DRAWING	ATARI INCORPORATED 14660 Wincheston Boulevard Los Gatos, California 95030
MATERIAL SEE P/L A005886	DRAWN BY DATE 5	TITLE CABINET, TOP ASSY
FINISH	CHECKED	
	ENGINEER	
	PROJECT ENGINEER 6/1/84	
	MFG ENGINEER	SIZE D DRAWING NO A005886 REV C
		SCALE SHEET 2 OF 2

LEMANS

ATARI™
Innovative leisure

ASSEMBLY TITLE / ASSY - CONTROL PANEL P/L A005884

PARTS LIST SPECIFICATION Page 1 of 1

Drawn		
Checked	Mech. Eng.	
Proj. Eng. MF	Elec. Eng	REV. D

Rev.	Description	Date	Apprv.	Rev.	Description	Date	Apprv.
A		6/21/76					
B	Rev per ECN 2775	6/24/76					
C	Rev per ECN 2803	6/30/76					
D	Rev per ECN 2816/2819	7/2/76					

Item	Part Number	Qty.	DESCRIPTION
1	005850	1	Control Panel with Graphics
2	A000608-01	1	H-Shift Assy
3	A000598-03	1	Steering Wheel Assy
4	005255	1	Shift Bezel
5	72-1112S	10	Mach. Screws, #10-24 x 3/4 Lg., Pan Hd Phil
6	004304-07	1	Switch Assy, One Player Start
7	005889	1	Shift, Spacer Block
8	005907	1	Control Panel Support
9	A005896	1	Harness, Control Panel
10	000567	1	Bow, Washer
11	85-22F406	4 Ref	Screws, Mach. F Type, #4-40 x 3/8 Lg.
12	003178	1 Ref	Lock Ring
13	75-5524B	2	Carriage, Bolts, ¼-20 x 1½ Lg.
14	75-015S	2	Washers, Flat ¼
15	75-045	2	Washers, Split-Lock ¼
16	75-915S	2	Hex Nuts, ¼-20

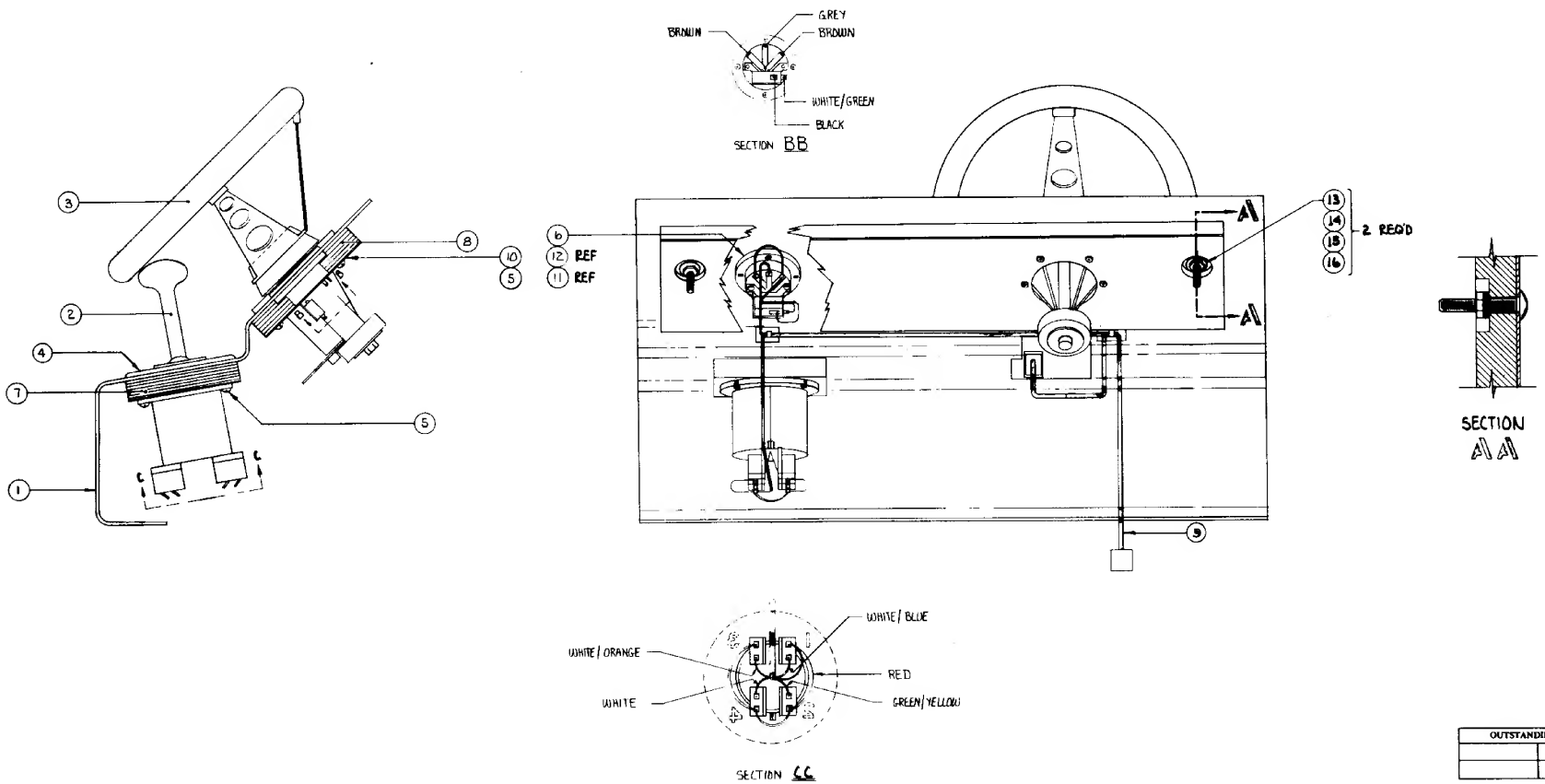

OUTSTANDING ECNs	

CURRENT VERSION-01

UNLESS OTHERWISE SPECIFIED DIMENSIONS ARE IN INCHES TOLERANCES ON ANGLES = ±1° SURFACE FINISH ✓	DO NOT SCALE DRAWING DRAWN BY / DATE 6-14-76	ATARI ATARI INCORPORATED 14600 Winchester Boulevard Los Gatos, California 95030
MATERIAL SEE P/L. A005884	CHECKED ENGINEER	TITLE ASS'Y CONTROL PANEL
FINISH	PROJECT ENGINEER	SIZE D / DRAWING NO A005884 / REV D

ATARI™ Innovative leisure

ASSEMBLY TITLE / ASSY - FOOT PEDAL MOUNTING P/L A005882

PARTS LIST SPECIFICATION Page 1 of 1

Drawn		
Checked	Mech. Eng.	
Proj. Eng. MF	Elec. Eng	REV. B

Rev.	Description	Date	Apprv.	Rev.	Description	Date	Apprv.
A							
B	REV. PER ECN 2849						

Item	Part Number	Qty.	DESCRIPTION
1	A004798	1	Double Metal Foot Pedal Assy
2	004801	1	Mntg. Board, Foot Pedal
3	75-018S	4	Flat Washer, #8
4	75-048	4	Lock Washers, #8
5	75-918S	5	Hex Nuts, #8-32
6	002191	2	Switch Brkt.
7	65-071C	2	Switch, Cherry
8	72-1412S	4	Mach Scr, #4-40 x 3/4"Lg Pan Hd Phil
9	75-044	4	Lock Washer #4
10	75-914S	4	Hex Nut, #4-40
11	72-6812	4	Screws, S.T. #8-3/4 Phil Pan Hd
12	72-6612	1	Screw, S.T. #6 x 3/4 Phil Pan Hd
13	A005900	1	Foot Pedal Harness Assy

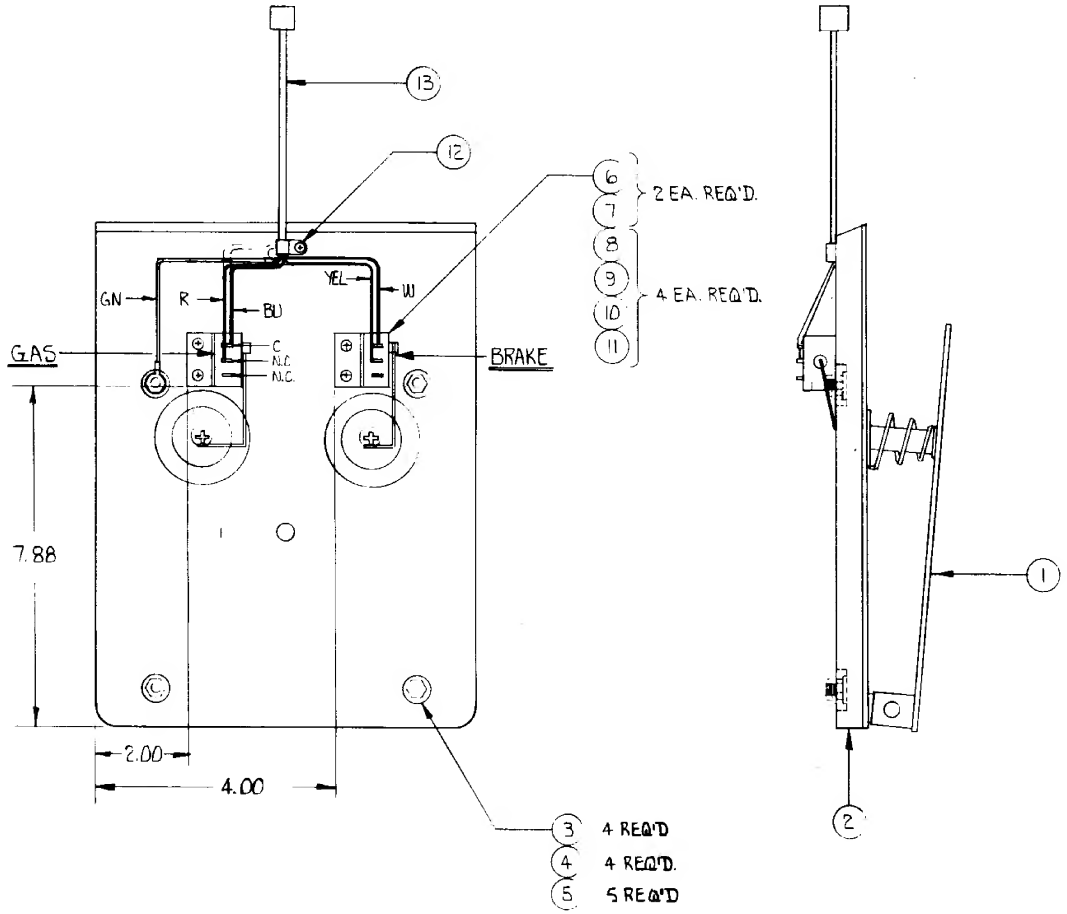

CURRENT VERSION -01

UNLESS OTHERWISE SPECIFIED DIMENSIONS ARE IN INCHES TOLERANCES ON: ANGLES ±1° SURFACE FINISH ✓ x = ±.1 xx = ±.03 xxx = ±.010	DO NOT SCALE DRAWING	ATARI INCORPORATED 14600 Winchester Boulevard Los Gatos, California 95030
MATERIAL: SEE P/L A005882	DRAWN BY DATE	TITLE: DOUBLE FOOT PEDAL MNTG. ASS'Y
FINISH:	CHECKED	
	ENGINEER	
	PROJECT ENGINEER	SIZE C DRAWING NO. A005882 REV B
	MFG ENGINEER	SCALE SHEET 1 OF 1

NOTES: UNLESS OTHERWISE SPECIFIED

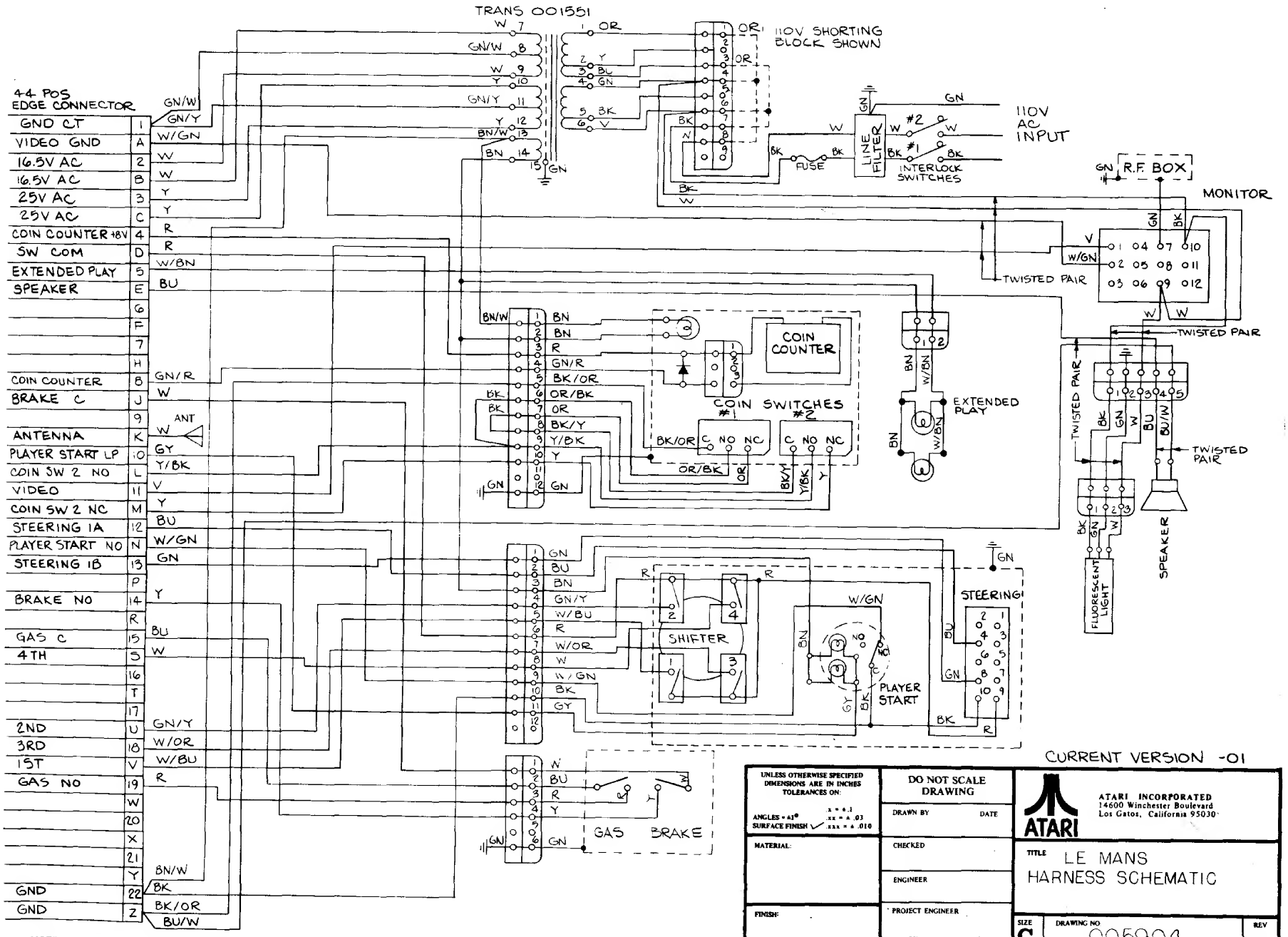
TRANS 001551
110V SHORTING BLOCK SHOWN
110V AC INPUT
LINE FILTER
FUSE
INTERLOCK SWITCHES
R.F. BOX
MONITOR
TWISTED PAIR
44 POS EDGE CONNECTOR
GND CT 1
VIDEO GND A
16.5V AC 2
16.5V AC B
25V AC 3
25V AC C
COIN COUNTER +8V 4
SW COM D
EXTENDED PLAY 5
SPEAKER E
COIN COUNTER B
BRAKE C J
ANTENNA K
PLAYER START LP L
COIN SW 2 NO M
VIDEO 11
COIN SW 2 NC 12
STEERING 1A N
PLAYER START NO 13
STEERING 1B P
BRAKE NO 14
GAS C 15
4TH S
2ND U
3RD 18
1ST V
GAS NO 19
GND 22
GND Z
COIN COUNTER
COIN SWITCHES #1
COIN SWITCHES #2
EXTENDED PLAY
SHIFTER
PLAYER START
STEERING
GAS
BRAKE
FLUORESCENT LIGHT
SPEAKER
NOTES : UNLESS OTHERWISE SPECIFIED
CURRENT VERSION -01
UNLESS OTHERWISE SPECIFIED DIMENSIONS ARE IN INCHES TOLERANCES ON:
DO NOT SCALE DRAWING
DRAWN BY
DATE
CHECKED
ENGINEER
PROJECT ENGINEER
M&G. ENGINEER
MATERIAL:
FINISH:
ATARI INCORPORATED
14600 Winchester Boulevard
Los Gatos, California 95030
TITLE
LE MANS
HARNESS SCHEMATIC
SIZE C
DRAWING NO 005904
REV A
SCALE
SHEET 1 OF 1

LE MANS

ATARI™ Innovative leisure

ASSEMBLY TITLE	ELECTRONICS TRAY ASSY	P/L A005885-01

PARTS LIST SPECIFICATION — Page 1 of 1

Drawn		
Checked	Mech. Eng.	
Proj. Eng.	Elec. Eng.	REV. A
MF		

Rev.	Description	Date	Apprv.	Rev.	Description	Date	Apprv.
A	[illegible]	6-24-76					

Item	Part Number	Qty.	DESCRIPTION
1	002621	1	Electronics Tray
2	A005903-01	1	Main Harness
3	79-3201	1	Fuse Holder
4	46-201202	1	Fuse, 2 AMP
5	001551-01	1	Transformer 001551
6	000622	1	Transformer Cover
7	000871	1	Label
8	41-2001	1	Filter, Power Line
9	68-002	1	Interlock Switch, AC Power
10	000268-02	1	Bracket, Switch Mounting
11	A005926-01	1	Mini Harness
12	A004576-05	1	Power Cord, 8 Ft Assy
13	A001921-01	A/R	Shorting Block, 95V
14	A001921-02	A/R	Shorting Block, 110V
15	A001921-03	A/R	Shorting Block, 220V H
16	A001921-04	A/R	Shorting Block, 220V L
17*	72-6608	3	Screw, SM Pan Hd Phil #6 x ½ Lg.
18	72-6612	5	" " " " " #6 x 3/4 Lg.
19	72-6812	7	" " " " " #8 x 3/4 Lg.
20	75-2820B	1	Screw, Mach, Rd Hd, Brass #8-32 x 1¼ Lg.
21	75-918B	1	Nut, Mach, Brass, #8-32
22*	68-001	2	Interlock Switch, AC Power
23*	000268-01	2	Bracket, Switch Mounting

*Items 22 & 23 are to be Substituted if Items 9 & 10 are not available & add a Qty of 2 to Item 17

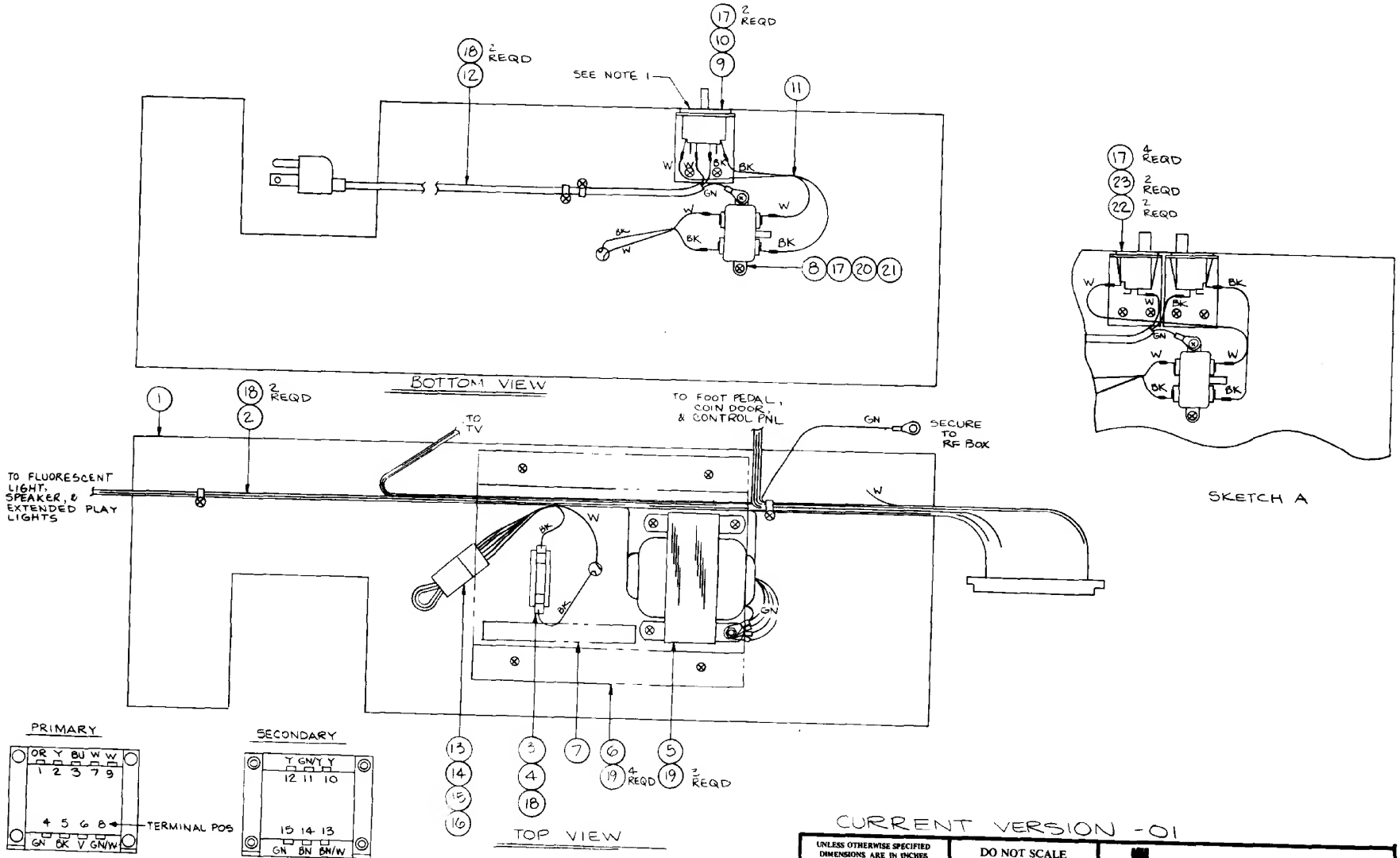

NOTES

1. SHOWN IS THE PREFERRED INTERLOCK SWITCH & MOUNTING BRACKET. IF NOT AVAILABLE SUBSTITUTE TWO INTERLOCK SWITCHES & MOUNTING BRACKETS AS SHOWN IN SKETCH A.

NOTES : UNLESS OTHERWISE SPECIFIED

CURRENT VERSION -01

UNLESS OTHERWISE SPECIFIED DIMENSIONS ARE IN INCHES TOLERANCES ON: ANGLES = ±1° SURFACE FINISH ✓ x = ± .1 xx = ± .03 xxx = ± .010	DO NOT SCALE DRAWING	ATARI INCORPORATED 14600 Winchester Boulevard Los Gatos, California 95030
	DRAWN BY DATE	
MATERIAL:	CHECKED	TITLE LE MANS ELECTRONICS TRAY ASSEMBLY
	ENGINEER	
FINISH:	PROJECT ENGINEER	SIZE C DRAWING NO A005885 REV A
	MFG ENGINEER	SCALE 1:2 SHEET 1 OF 1

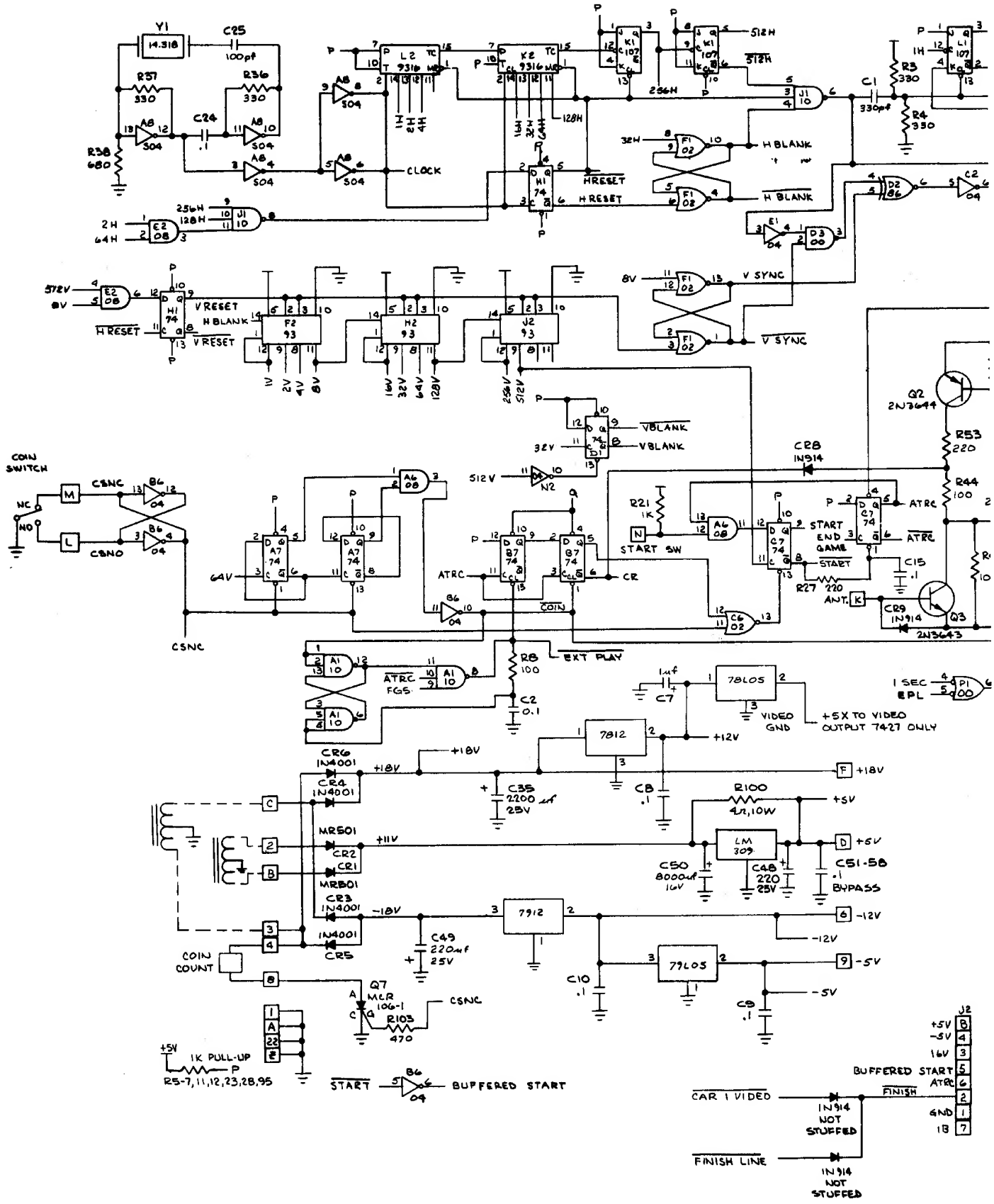

Y1
14.318
C25
100pf
R37
330
R36
330
C24
.1
R38
680
L2
9316
K2
9316
CLOCK
H RESET
H BLANK
V SYNC
V RESET
COIN SWITCH
CSNC
CSNO
START SW
START END GAME
START
ATRC
ANT.
EXT PLAY
ATRC FGS
VIDEO GND
+5X TO VIDEO OUTPUT 7427 ONLY
1 SEC
EPL
78L05
7812
7912
79L05
LM 309
BYPASS
COIN COUNT
MCR 106-1
1K PULL-UP
R5-7,11,12,23,28,95
START
BUFFERED START
CAR 1 VIDEO
FINISH LINE
1N914 NOT STUFFED
BUFFERED START
FINISH
GND
1B

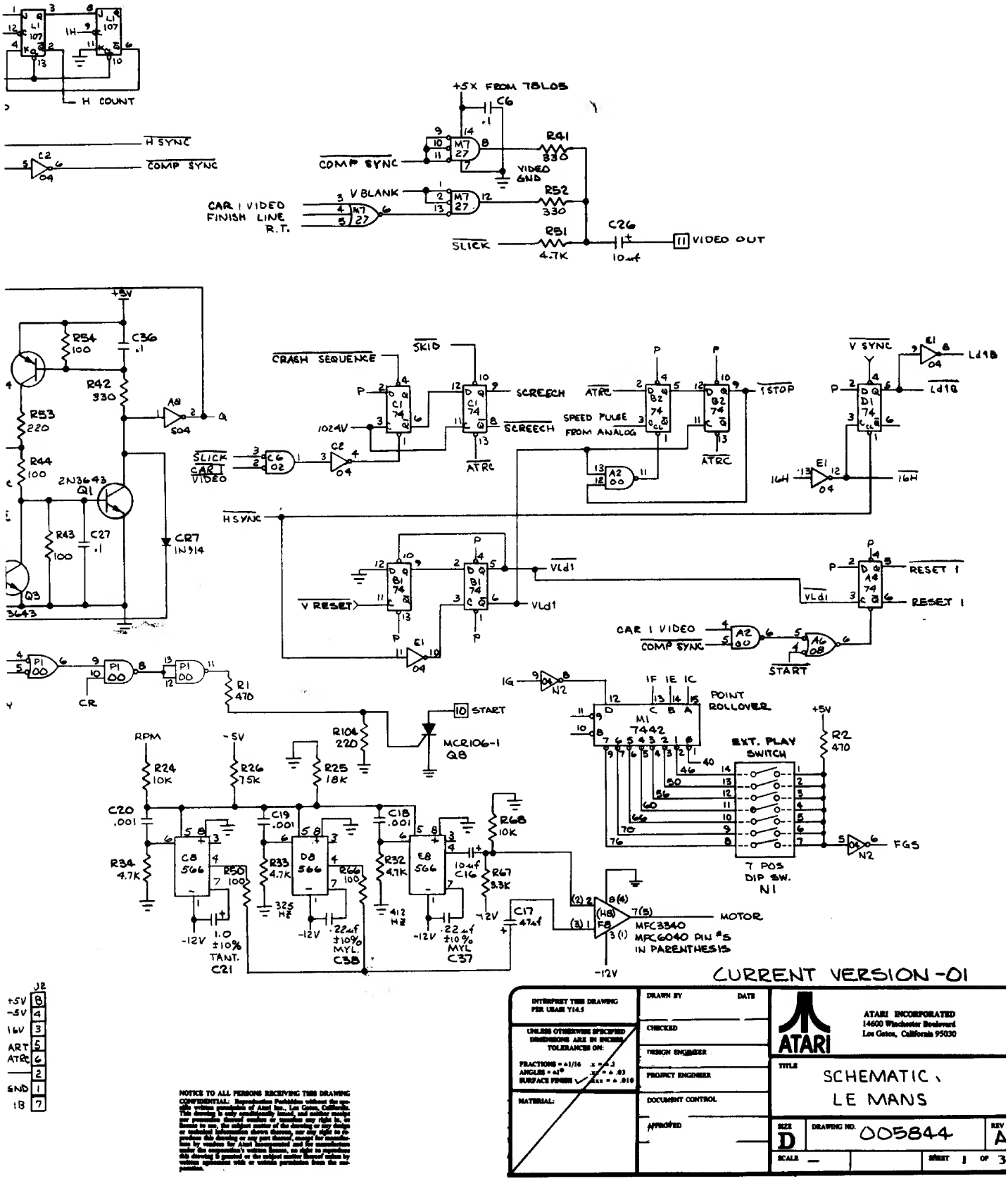

CURRENT VERSION -01

NOTICE TO ALL PERSONS RECEIVING THIS DRAWING CONFIDENTIAL: Reproduction Prohibited without the specific written permission of Atari Inc., Los Gatos, California. This drawing is only conditionally loaned, and must be returned upon permission thereof, neither its transmission nor any rights in, or thereto to use, the subject matter of the drawing or any design or device and information thereon, may be sold or disclosed to others whereby, or any part thereof, except for transmission back by vendor to Atari Incorporated and for manufacture under this corporation's written consent, no right to reproduce this drawing is granted or the subject matter thereof shown by visible application with or without permission from the use granted.

INTERPRET THIS DRAWING PER USASI Y14.5	DRAWN BY / DATE	ATARI INCORPORATED 14600 Winchester Boulevard Los Gatos, California 95030
UNLESS OTHERWISE SPECIFIED DIMENSIONS ARE IN INCHES. TOLERANCES ON: FRACTIONS ± 1/16 ANGLES ± 1° SURFACE FINISH ✓	CHECKED	TITLE: SCHEMATIC, LE MANS
	DESIGN ENGINEER	
	PROJECT ENGINEER	
MATERIAL:	DOCUMENT CONTROL	SIZE D / DRAWING NO. 005844 / REV A
	APPROVED	SCALE — / SHEET 1 OF 3

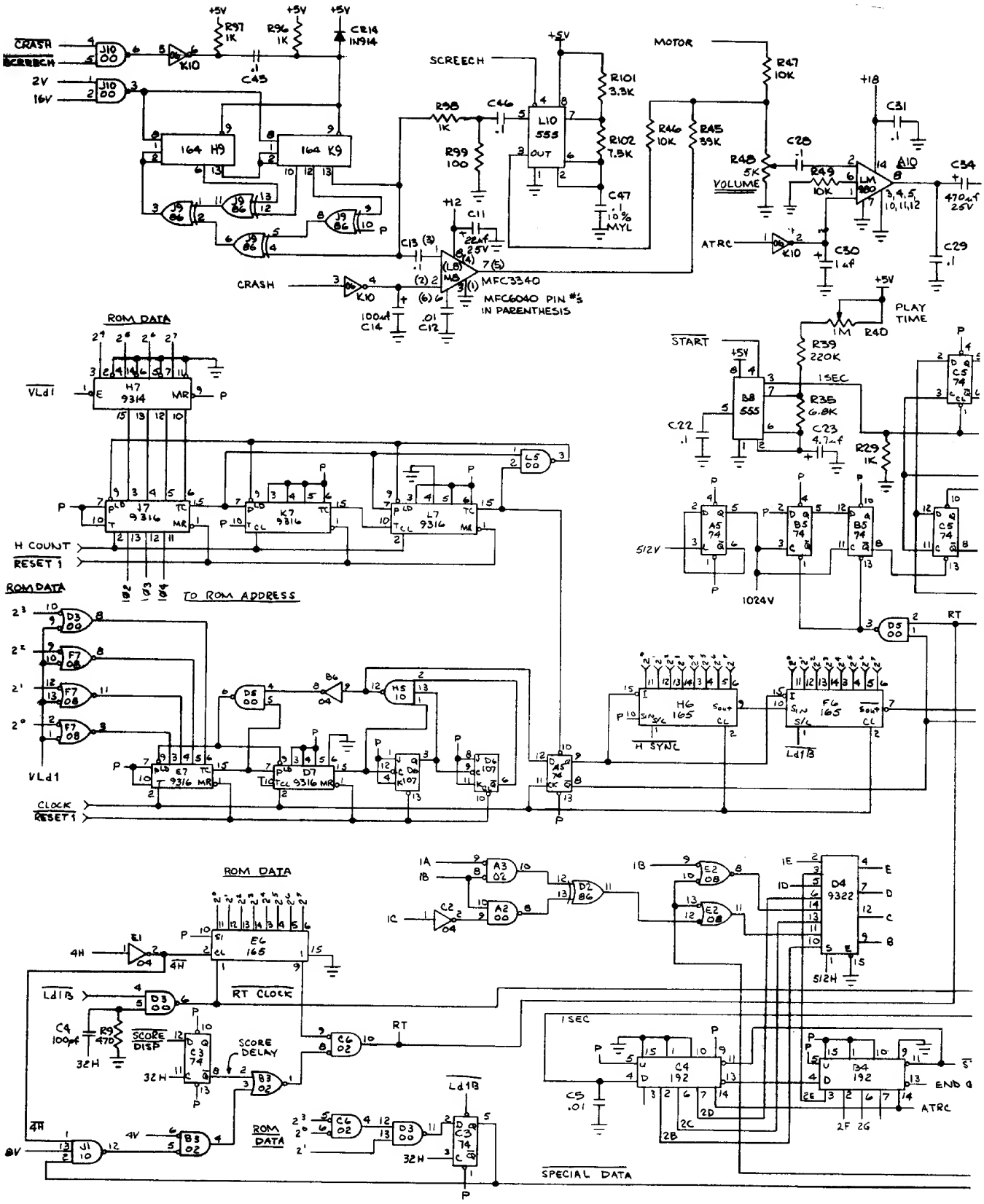
CRASH
SCREECH
2V
16V
+5V
R97 1K
R96 1K
CR14 IN914
C45
J10 00
K10
164 H9
164 K9
J9 86
P
SCREECH
R98 1K
C46
R99 100
L10 555
R101 3.3K
R102 7.5K
C47 .1 10% MYL
MOTOR
R47 10K
R46 10K
R45 39K
+12
C11 22uf 25V
C13 (3) .1
MFC3340
MFC6040 PIN #'s IN PARENTHESIS
CRASH
100uf C14
.01 C12
+18
C31 .1
R48 5K VOLUME
C28 .1
R49 10K
A10 LM 380
3,4,5,10,11,12
C34 470uf 25V
C29 .1
ATRC
C30 1uf
PLAY TIME
1M R40
START
R39 220K
1SEC
B8 555
R35 6.8K
C22 .1
C23 4.7uf
R29 1K
ROM DATA
VLd1
H7 9314
J7 9316
K7 9316
L7 9316
L5 00
H COUNT
RESET 1
Ø2 Ø3 Ø4
TO ROM ADDRESS
A5 74
B5 74
C5 74
5/12V
1024V
RT
D5 00
D3 00
F7 08
B6 04
H5 10
D5 00
E7 9316
D7 9316
D6 107
A5 74
H6 165
F6 165
H SYNC
Ld1B
CLOCK
RESET 1
ROM DATA
E1 04
E6 165
4H
RT CLOCK
Ld1B
C4 100pf
R9 470
SCORE DISP
32H
C3 74
SCORE DELAY
B3 02
C6 02
RT
4V
J1 10
8V
ROM DATA
A3 02
A2 00
C2 04
D2 86
E2 08
D4 9322
512H
1SEC
C4 192
B4 192
C5 .01
END C
ATRC
2F 2G
SPECIAL DATA

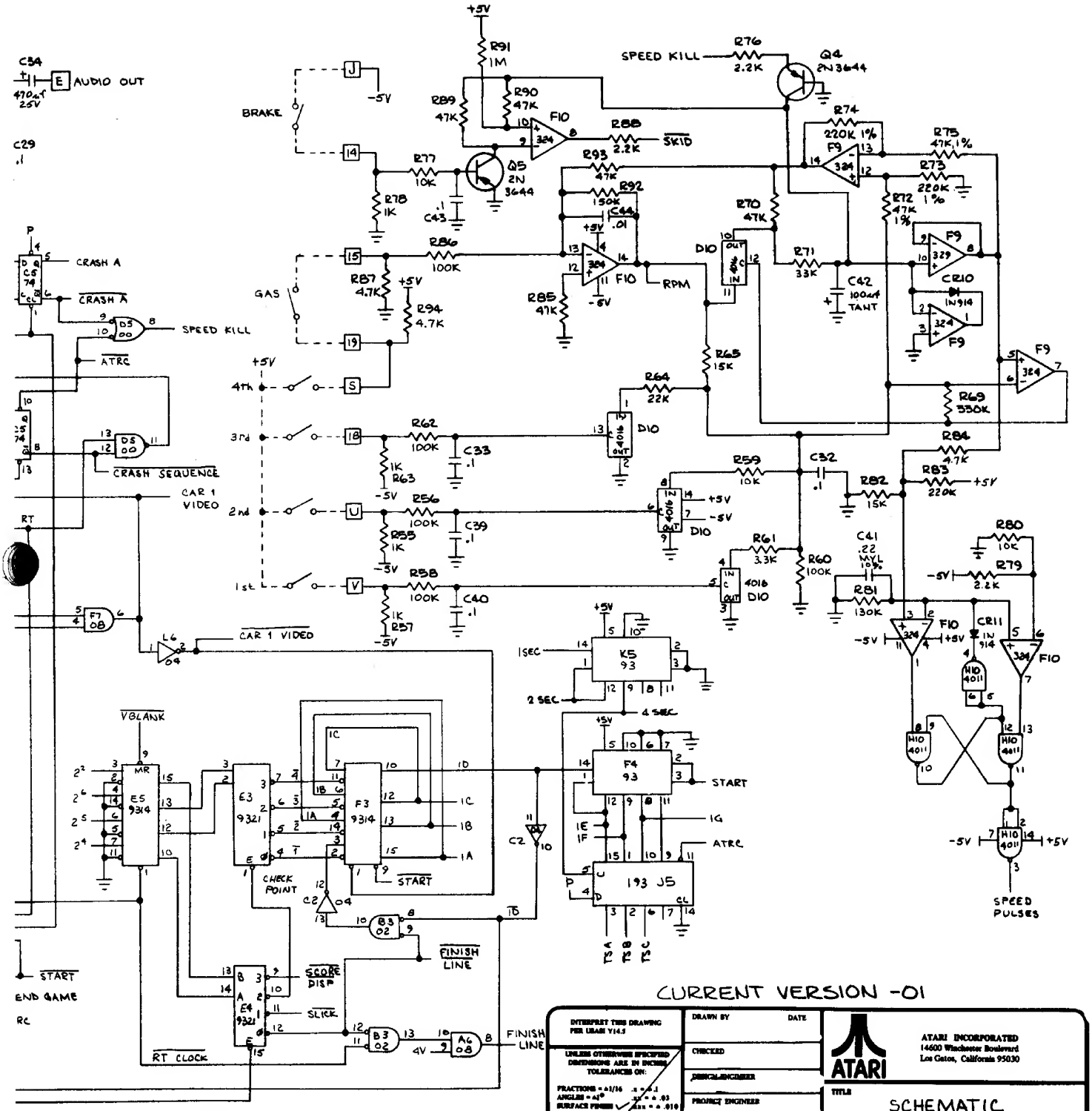

CURRENT VERSION -01

NOTICE TO ALL PERSONS RECEIVING THIS DRAWING CONFIDENTIAL: Reproduction Forbidden without the specific written permission of Atari Inc., Los Gatos, California. This drawing is only conditionally loaned, and without limiting the generality of the foregoing no reproduction or transfer of any kind in whole or in part, the subject matter of the drawing or any design or technical information shown thereon, and any right to reproduce this drawing or any part thereof, except for manufacture by, or orders for Atari Incorporated and for manufacture under the corporation's written license, or right to reproduce this drawing is granted or the subject matter thereof taken by implication, agreement with or written permission from the corporation.

INTERPRET THIS DRAWING PER USASI Y14.5

UNLESS OTHERWISE SPECIFIED DIMENSIONS ARE IN INCHES
TOLERANCES ON:
FRACTIONS = ±1/16 .x = ±.1
ANGLES = ±1° .xx = ±.03
SURFACE FINISH ✓ .xxx = ±.010

MATERIAL:

DRAWN BY DATE
CHECKED
DESIGN ENGINEER
PROJECT ENGINEER
DOCUMENT CONTROL
APPROVED

ATARI INCORPORATED
14600 Winchester Boulevard
Los Gatos, California 95030

TITLE
SCHEMATIC
LE MANS

SIZE D | DRAWING NO. 005844 | REV A
SCALE — | SHEET 2 OF 3

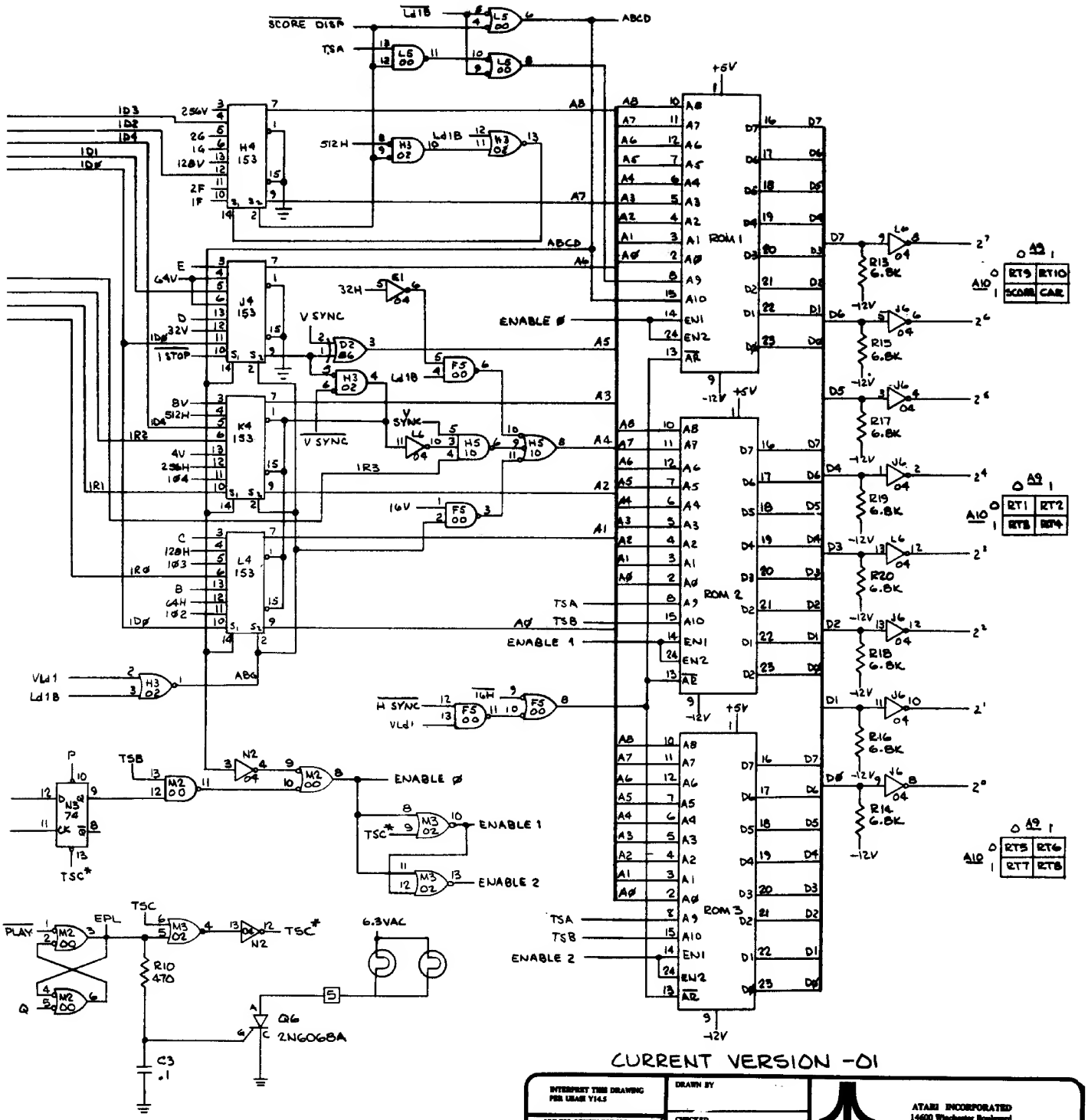

CURRENT VERSION -01

INTERPRET THIS DRAWING PER USASI Y14.5	DRAWN BY	ATARI INCORPORATED 14600 Winchester Boulevard Los Gatos, California 95030
UNLESS OTHERWISE SPECIFIED DIMENSIONS ARE IN INCHES TOLERANCES ON: FRACTIONS ± 1/16 ANGLES ± 1° SURFACE FINISH	CHECKED	TITLE: SCHEMATIC LE MANS
MATERIAL:	DESIGN ENGINEER	SIZE D · DRAWING NO. 005844 · REV A
	PROJECT ENGINEER	SCALE · SHEET 3 OF 3
	DOCUMENT CONTROL	

LE MANS

ATARI™ Innovative leisure

ASSEMBLY TITLE P.C. BD. ASSY., LE MANS **P/L** A005844-01

PARTS LIST SPECIFICATION

Drawn		
Checked	Mech. Eng.	
Proj. Eng.	Elec. Eng	REV. A

Rev.	Description	Date	Apprv.	Rev.	Description	Date	Apprv.
A	PROD. REL.						

Item	Part Number	Qty.	DESCRIPTION		
1	005845-01	1	PRINTED CIRCUIT BOARD		
2	10-5101	7	RES, CAR.COMP, ¼w,5%	100 OHM	R8,43,44,50,54,66, 99
3	10-5102	17	" " " " "	1K OHM	R5-7,11,12,21,23, 28,29,55,57,63, 78,95-98
4	10-5103	8	" " " " "	10K OHM	R24,46,47,49,59, 68,77,80
5	10-5104	5	" " " " "	100K OHM	R56,58,60,62,86
6	10-5105	1	" " " " "	1M OHM	R91
7	10-5134	1	" " " " "	130K OHM	R81
8	10-5151	2	" " " " "	150 OHM	R30,31
9	10-5153	2	" " " " "	15K OHM	R65,82
10	10-5154	1	" " " " "	150K OHM	R92
11	10-5183	1	" " " " "	18K OHM	R25
12	10-5221	3	" " " " "	220 OHM	R27, 53,104
13	10-5222	3	" " " " "	2.2K OHM	R76,79,88
14	10-5223	1	" " " " "	22K OHM	R64
15	10-5224	2	" " " " "	220K OHM	R83,39
16					
17	10-5331	7	" " " " "	330 OHM	R3,4,36,37,41,42, 52
18	10-5332	3	" " " " "	3.3K OHM	R61,67,101
19	10-5333	1	" " " " "	33K OHM	R71
20	10-5334	1	" " " " "	330K OHM	R69
21	10-5393	1	" " " " "	39K OHM	R45

ASSEMBLY TITLE P.C. BD. ASSY., LE MANS **P/L** A005844-01

PARTS LIST SPECIFICATION REV. A

Item	Part Number	Qty.	DESCRIPTION		
22	10-5471	5	RES, CAR COMP, ¼w, 5%	470 OHM	R1,2,9,10,103
23	10-5472	7	" " " " "	4.7K OHM	R32-34,51,84,87,94
24	10-5473	5	" " " " "	47K OHM	R70,85,89,90,93
25	10-5681	1	" " " " "	680 OHM	R38
26	10-5682	9	" " " " "	6.8K OHM	R13-20,35
27	10-5752	1	" " " " "	7.5K OHM	R102
28	10-5753	1	" " " " "	75K OHM	R26
29	14-1224	2	" " FILM " 1%	220K OHM	R73,74
30	14-1473	2	" " " " "	47K OHM	R72,75
31	19-808W4P0	1	" WIREWOUND 10w	4 OHM	R100
32					
33					
34	19-311105	1	TRIMPOT 1M OHM		R40
35	19-311502	1	" 5K OHM		R48
36	21-101104	1	CAP, MYLAR, .1uf, 10%	100V	C47
37	21-101224	3	" " .22uf, 10%	100V	C37,38,41
38	24-250105	2	" ELECT, 1uf 25V		C7,30
39	24-250106	2	" " 10uf "		C16,26
40	24-250107	1	" " 100uf "		C14
41	24-250226	1	" " 22uf "		C11
42	24-250227	2	" " 220uf "		C48,49
43	24-250475	1	" " 4.7uf "		C23
44	24-250476	1	" " 47uf "		C17
45	24-250477	1	" " 470uf "		C34
46	24-160808	1	" " 8000uf 16V		C50
47	27-102102	3	" CER DISC .001uf 1000V		C18-20
48	27-250103	3	" " " .01uf 25V		C5,12,44
49	27-250104	30	" " " 0.1uf 25V		C2,3,6,8-10,13,15, 22,24,27-29,31-33, 36,39,40,43,45,46, 51-58
50	28-101101	2	CAP. DIPPED MICA 100pf		C4,25
51	28-101331	1	" " " 330pf		C1
52	29-004	1	" TANT. 1uf		C21
53	29-013	1	" " 100uf		C42
54	24-250228	1	" ELECT 2200uf 25V		C35

Item	Part Number	Qty.	DESCRIPTION	
55				
56				
57	31-MR501	2	DIODE, POWER MR501	CR1,CR2
58	31-IN914	6	" IN914	CR7-11,14
59	31-IN4001	4	" IN4001	CR3-6
60	38-MV5013	2	LED, RED MV5013	CR12,13
61	33-2N2644	3	TRANSISTOR, 2N3644	Q2,4,5
62	34-2N3643	2	" 2N3643	Q1,3
63	35-MCR106-1	2	SCR,MCR106-1	Q7,8
64				
65	37-7400	8	I.C. 7400	P1,A2,M2,D3,D5,F5,L5,J10
66	37-7402	6	" 7402	F1,A3,B3,H3,M3,C6
67	37-7404	6	" 7404	E1,C2,N2,B6,J6,L6
68	37-74S04	1	" 74S04	A8
69	37-7406	1	" 7406	K10
70	37-7408	3	" 7408	E2,A6,F7
71	37-7410	3	" 7410	A1,J1,H5
72	37-7413	1	" 7413	J8
73	37-7427	1	" 7427	M7
74	37-7442	1	" 7442	M1
75	37-7474	15	" 7474	B1,C1,D1,H1,B2,C3,N3,A4,A5, B5,C5,A7,B7,C7,K8
76	37-7486	2	" 7486	D2,J9
77	37-7493	5	" 7493	F2,H2,J2,F4,K5
78	37-74107	3	" 74107	K1,L1,D6
79	37-74153	4	" 74153	H4,J4,K4,L4
80	37-74164	2	" 74164	H9,K9
81	37-74165	3	" 74165	E6,F6,H6
82	37-74192	2	" 74192	B4,C4
83	37-74193	3	" 74193	J3,K3,J5
84	37-555	2	" 555	B8,L10
85	37-566	3	" 566	C8,D8,E8
86	37-LM309	1	Regulator, LM 309	
87	37-LM324	2	TC LM324	F9,F10
88	37-LM380	1	" LM380	A10
89				

Item	Part Number	Qty.	DESCRIPTION	
90	37-9316	7	I.C. 9316	K2,L2,D7,E7,J7,K7,L7
91	37-9321	2	" 9321	E3,E4
92	37-9322	1	" 9322	D4
93	37-MFC6040	2	" MFC6040	F8,M8
94	37-MFC3340	*2	" MFC3340	H8,L8
95	37-4011	1	" 4011	H10
96	37-4016	1	" 4016	D10
97	37-78L05	1	+5V REG. 78L05	
98	37-7812	1	+12V REG. 7812	
99	37-79L05	1	-5V REG. 79L05	
100	37-7912	1	-12V REG. 7912	
101				
102	66-117PIT	1	DIP SWITCH 7xSPST	N1
103				
104	78-16006	2	SILPAD (TO-220)	
105	90-101	1	CRYSTAL	Y1
106	78-06001	1	HEATSINK	
107	78-16005	1	SILPAD	
108	005927-01	1	HEATSINK, -12V REGULATOR	
109	005837-01	1	ROM 1	N5
110	005838-01	1	ROM 2	N4
111	005839-01	1	ROM 3	N6
112	35-2N6068A	1	TRIAC, 2N6068A	Q6
113				
114	72-1608C	2	SCREW, MACH, PAN HD PHIL #6-32x½ CRES	
115	75-016S	2	WASHER, FLAT #6	
116	75-056	2	WASHER, INT. LOCK #6	
117	75-916C	2	NUT, HEX, #6-32 CRES	
118				
119	72-1406C	2	SCREW, MACH PAN HD. PHIL #4-40x3/8 CRES	
120	75-014S	2	WASHER, FLAT #4	
121	75-054	2	WASHER, INT LOCK #4	
122	75-914C	2	NUT, HEX, #4-40 CRES	

* NOTE: If item 93 (MFC6040) is not available, item 94 (MFC3340) may be substituted

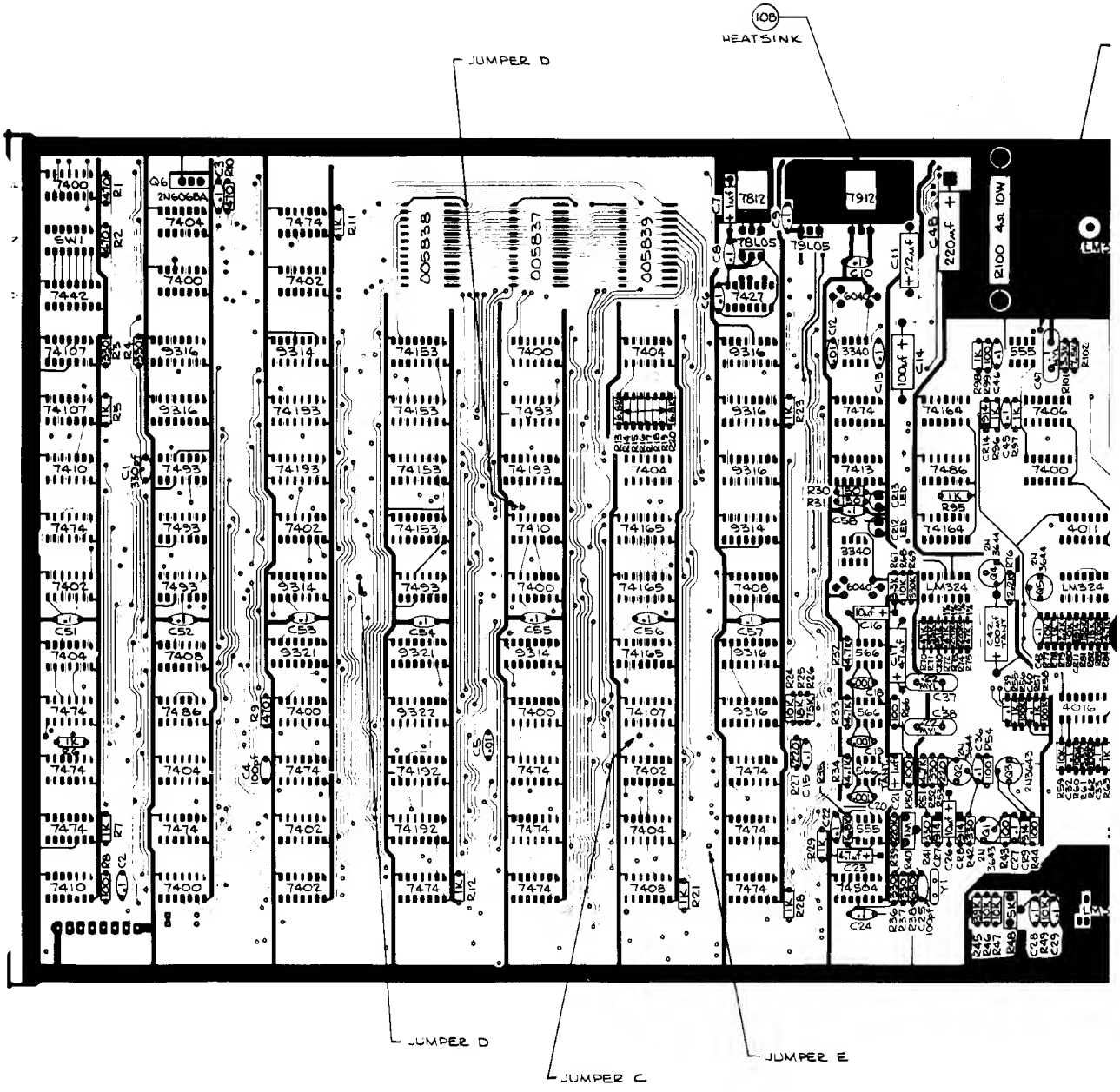

NOTES : UNLESS OTHERWISE SPECIFIED

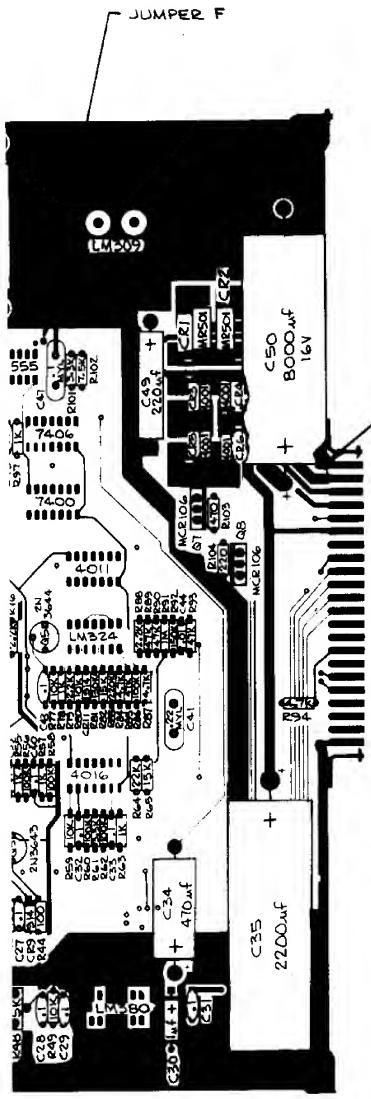

NOTES (UNLESS OTHERWISE SPECIFIED):

1. THE FOLLOWING JUMPERS MUST BE ADDED AS PART OF THE P.C. BOARD ASSEMBLY, USING LARGE PADS AS INDICATED:
   A. FROM PIN 2 OF M7 (7427) TO PIN 8 OF D1 (7474).
   B. FROM PIN 4 OF M7 (7427) TO PIN 8 OF A6 (7408).
   C. FROM PIN 5 OF M7 (7427) TO PAD INDICATED AS JUMPER C.
   D. BETWEEN THE TWO PADS INDICATED AS JUMPER D.
   E. FROM PIN 5 OF M2 (7400) TO PAD INDICATED AS JUMPER E.
   F. AN 18 GA. JUMPER BETWEEN THE TWO PADS INDICATED AS JUMPER F.
2. INSTALL MFC6040's IN POSITIONS F8 AND M8. THESE MAY BE SUBSTITUTED BY MFC3340's AT POSITIONS H8 AND L8.
3. USE THIS ASSY. DWG. WITH P.C. BD 005845, REVISION "A".

CURRENT VERSION -01

UNLESS OTHERWISE SPECIFIED DIMENSIONS ARE IN INCHES TOLERANCES ON: .x = ±.1, .xx = ±.03, .xxx = ±.010; ANGLES = ±1°; SURFACE FINISH ✓	DO NOT SCALE DRAWING	ATARI INCORPORATED, 14600 Winchester Boulevard, Los Gatos, California 95030
	DRAWN BY / DATE	
MATERIAL: SEE P/LA005844-01	CHECKED	TITLE: ASSEMBLY, LE MANS P.C. BOARD
	ENGINEER	
FINISH:	PROJECT ENGINEER	SIZE D; DRAWING NO. A005844; REV A
	MFG ENGINEER	SCALE 1:1; SHEET 1 OF 1

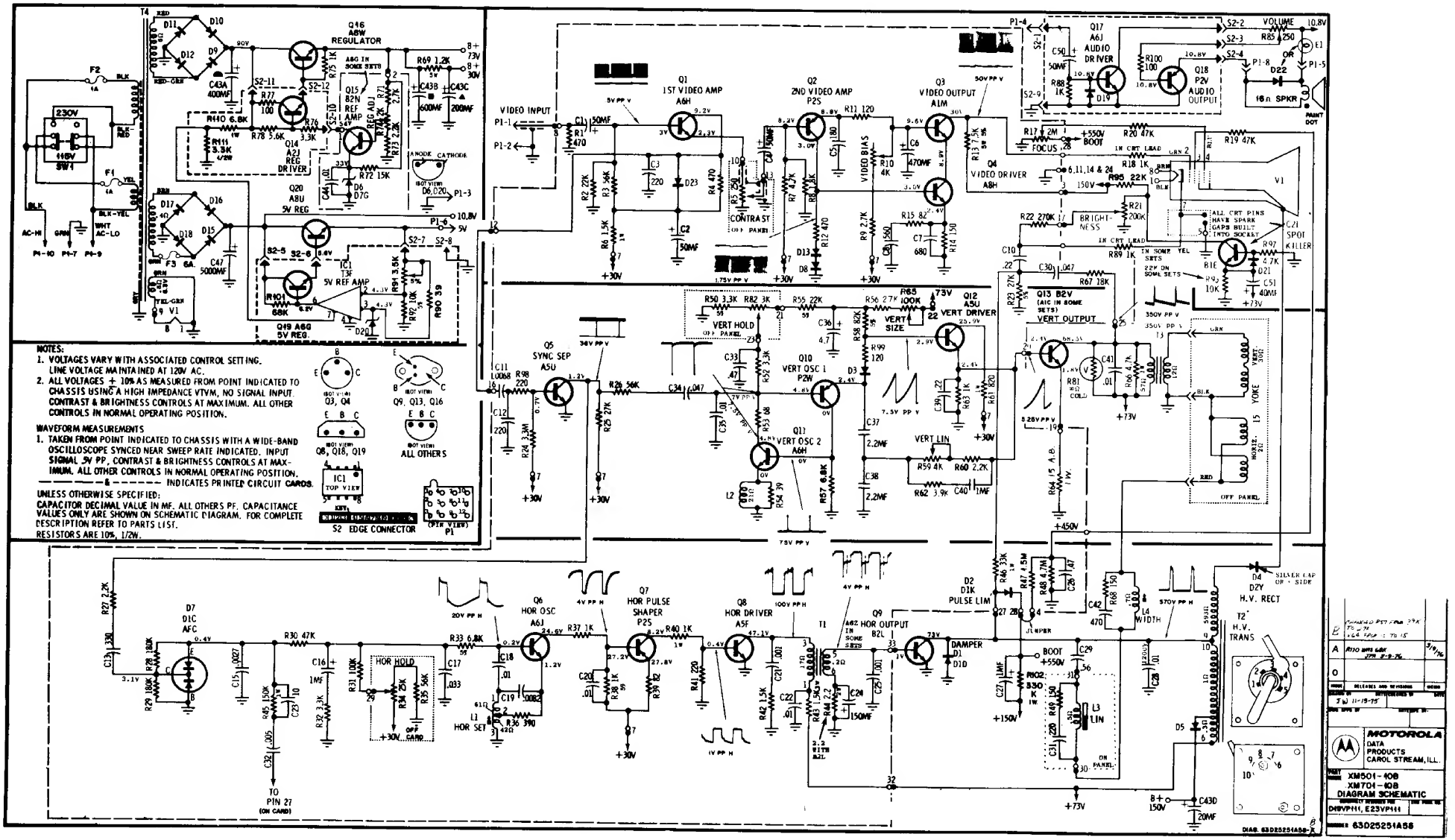

MOTOROLA
DATA PRODUCTS
CAROL STREAM, ILL.

XM501-408
XM701-408
DIAGRAM SCHEMATIC

D49VP111, E23VP111

63D25251A88

ADDENDA

Added to LeMans schematic and printed circuit boards.

Please make sure that these modifications are done to the printed circuit boards.

1st modification: if for audio getting into video.

1) A .1uf 100v mylar capacitor located at C31 next to the 2200uf capacitor by edge of board.

2nd modification: to check for inversion of playfield at free play.

1) A 7486 I.C. at location A4 on printed circuit board.

   NOTE: 7486 is attached to the top of a 7474 I.C. located a A4. Only pin 14 and pin 7 are soldered. The rest are bent out so jumper wire can be attached.

2) Cut and lift pins 13 of M7. Pin 11 of B4 and C4 and pin 13 of B7.
3) Jumper A7 pin 10 to B7 pin 13.
4) Jumper F3 pin 9 to A4 pin 1 (7486).
5) Jumper A1 pin 8 to A4 pin 2 (7486).
6) Jumper A4 pin 3 (7486) to A4 pin 4 (7486).
7) Jumper A4 pin 5 (7486) to nearest pull up resistor.
8) Jumper A4 pin 6 (7486) to C4 and B4 pin 11.
9) Jumper M7 pin 13 to A4 (7486) pin 9.
10) Jumper M2 pin 3 to A4 (7486) pin 10.
11) Jumper M7 pin 13 to A4 (7486) pin 8.
12) Changed R52, a 330 ohm resistor to a 560 ohm resistor.
13) Paralleled a 4.7K ohm resistor across R51.
14) Paralleled a IN914 diode across R41.

    Make sure that the cathode of diode is connected to the negative side of C26, a 10uf capacitor.

GK/cm

ERRATA

SOMEBODY MADE AN ERROR IN THIS BOOC
AND THIS PAGE IS HERE TO CORREKT IT!

E- 2007

ATARI™

The following supersedes the corresponding information in manual TM- 077

LeMans Operation, Maintenance and Service Manual

In drawing number A005884, section A-A was shown incorrectly. The wire colors on the gear shifter switch were called out wrong and should be labeled as follows. If the gear shifter switch is disassembled and re-wired according to the drawing in the manual, then the gears will not work in their proper order in the game.

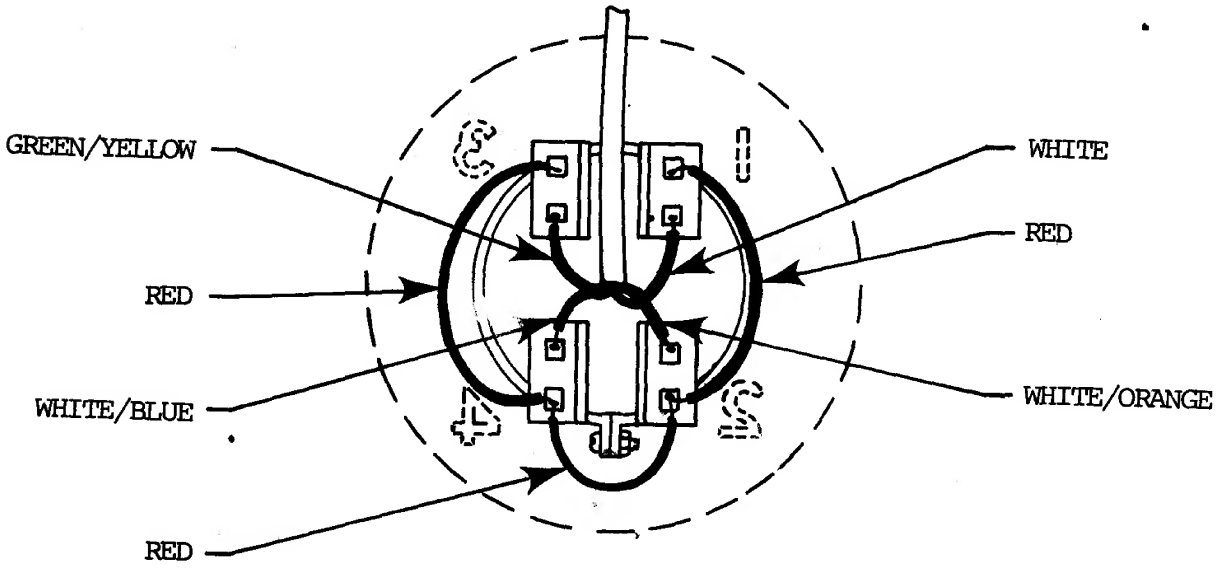

Rear View of Gear
Shifter Switch

In correcting this mistake, other revisions were also made to this drawing. Therefore, we have enclosed a copy of the entire drawing for your reference.